Department of Development Services
205 Lawrence Street
Marietta, Georgia 30060
Brian Binzer, Director

STAFF REVIEW AND RECOMMENDATION

Variance Case #: **V2016-10** **Legistar #:** **20160237**

Board of Zoning Appeals Hearing: **Monday, August 29th, 2016 – 6:00 p.m.**

Property Owner: **Bong Hong**
2565 Delk Road
Marietta, GA 30067

Applicant: **Kwang M. Lim (Randy Hoeptner)**
2565 Delk Road
Marietta, GA 30067

Address: **2565 Delk Road**

Land Lot: **858** **District:** **17** **Parcel:** **0080**

Council Ward: **6A** **Existing Zoning:** **CRC (Community Retail Commercial)**

Special Exception / Special Use / Variance(s) Requested:

1. Variance to allow more than 50% of the windows containing signage account for more than 50% of the window face *[§714.04 (E)]*
2. Variance to allow wall signage cover more than 15% and/or 5% of the wall face. *[§714.04 (B)]*

Statement of Fact

As per section 720.03 of the Comprehensive Development Code of Marietta, the Board of Zoning Appeals may alter or modify the application of any such provision in the Development Code because of unnecessary hardship if doing so shall be in accordance with the general purpose and intent of these regulations, or amendments thereto, and only in the event the board determines that by such alteration or modification unnecessary hardship may be avoided and the public health, safety, morals and general welfare is properly secured and protected. In granting any variance the board of zoning appeals shall designate such conditions in connection therewith as will, in its opinion, secure substantially the objectives of these regulations and may designate conditions to be performed or met by the user or property owner, out of regard for the public health, safety, comfort, convenience, and general welfare of the community, including safeguards for, with respect to light, air, areas of occupancy, density of population and conformity to any master plan guiding the future development of the city. The development costs of the applicant as they pertain to the strict compliance with a regulation may not be the primary reason for granting a variance.

Criteria:

1. Exceptional or extraordinary circumstances or conditions *are/are not* applicable to the development of the site that do not apply generally to sites in the same zoning district.
2. Granting the application *is/is not* necessary for the preservation and enjoyment of a substantial property right of the applicant, and to prevent unreasonable property loss or unnecessary hardship.

3. Granting the application *will/will not* be detrimental or injurious to property or improvements in the vicinity of the development site, or to the public health, safety, or general welfare.

PICTURES

Front of Mink's facing Delk Road

Side of Mink's facing west

Recommended Action:

Denial. Kwang M. Lim is requesting sign variances for the property at 2565 Delk Road, Mink's Package Store, which is located at 2565 Delk Road. The subject property and the properties on either side are all zoned CRC (Community Retail Commercial). The apartments to the rear are located in Cobb County and are zoned RM-12. Major improvements to the property, including building renovations and site improvements, were recently finished for this site.

Every window pane on the front and west side of the building is covered in product advertisements. The applicant is requesting variances to exceed the allowable amount of window signage. Section 714.04 (E) of the Sign Ordinance states: *No more than 50% of the windows of a business shall be used to display window signs and the signage in a single window shall not account for more than 50% of a window face.*

Further, *the total permissible sign area for a single business may be incorporated within wall, canopy, under canopy, projecting or window signage provided that in aggregate, the total sign area does not exceed the 15% limit.* The applicant has not provided any clear dimensions specifying the amount of signage covering the windows. The existing permitted wall signs (BP15-1007 through BP15-1009) indicate they cover approximately 5% of each building face. It is likely that the front and west side of the buildings have more than 15% of the wall covered in signage.

The applicant has not provided a justifiable hardship that does not apply to every other similarly zoned business in the City. The building and its existing, permitted signage is highly visible from the Delk Road corridor. One of the purposes of the sign ordinance is to eliminate visual clutter. As such, approval of this request would set a precedent that would be detrimental to the aesthetics of the City. As a result, ***staff recommends denial of this variance request***.

This item was tabled at the June 29, 2016 of the Board of Zoning Appeals – and it was also tabled at the July 27, 2016 meeting. The applicant was directed to provide more detailed dimensional information to City Staff that could be reported to the Board at the August meeting. At this time, Staff has not been contacted by the applicant, and no additional information has been received.

Department of Development Services
205 Lawrence Street
Marietta, GA 30060
Brian Binzer, AICP, Director

APPLICATION FOR VARIANCE OR APPEAL

(Owner/Applicant/or Representative must be present at all public hearings)

For Office Use Only:

Application #: V2016-10 **Legistar #:** _____ **BZA Hearing Dt:** ~~4-25-16~~ 6-27-16

City Council Hearing Dt (if applicable) #: N/A **PZ #:** 16-125

This is a variance/appeal application for:

[X] **Board of Zoning Appeals** [ ] **City Council**

Owner's Name Bong Hong

Address 2565 Delk RD. Marietta GA Zip Code: 30067

Telephone Number: 770 952 2337 Email Address: minkspackage@Gmail.Com

404-429-509

COMPLETE ONLY IF APPLICANT IS NOT OWNER:

Applicant Kwang M Lim G.M. / Randy Hoeptner (translator)

Address 2565 Delk RD. Marietta GA Zip Code: 30067

Telephone Number _____ Email Address: _____

Text him if questions so he can translate. owner/Applic DO NOT speak Engl. well.

Address of property for which a variance or appeal is requested:

2565 Delk RD marietta GA 30067 Date of Acquisition: _____

Land Lot (s) 08580 District 17 Parcel 0080 Acreage .931 Zoned CRC Ward GA FLU CAC

List the variance(s) or appeal requested (please attach any additional information):

See Atatch Windows not currently 50% visible from Street. Seeking variance to all window stay covered.

Required Information

1. ✓ Application fee ($250)
2. Completed notarized application. **The original application must be submitted with ALL original signature(s) – Copies of the application or signature(s) will NOT be accepted.**
3. ✓ Copy of the deed that reflects the current owner(s) of the property.
4. ✓ Letter describing the reason for the variance request, stating why strict adherence to the code would result in a particular hardship (as distinguished from a mere inconvenience or desire to make more money).
5. ✓ **Site plan – drawn to scale**. Site plans must illustrate property lines and all relevant existing information and conditions in addition to proposed additions or modifications within the referenced property lines of the tract(s).
   Copies Required: **One** (1) - (8 ½" x 11") -or- (11" x 17") drawn to scale.
   Optional Additional Plat size: (24"x 36"). If providing (24"x 36") then 25 copies REQUIRED.
6. Copy of current tax bill showing payment or documentation certified by the City of Marietta Tax Office.
7. ✓ Documentation authorizing applicant to submit application by property owners if applicant is not owner.

Note: The Department of Development Services reserves the right to obtain additional information that reasonably may be required in order that an informed decision may be made.

OVER

#4

MINKS PACKAGE
2565 DELK ROAD
MARIETTA GA, 30067

MAR.10.2016

Dear Sirs,

This is a request for variance as to our store signage. While we are more than willing to cooperate with the signage requirements, we would like for you to take into consideration the fact that there has been a significant investment involved with these windows. In fact, 9 of the windows involved include original art work – not just commercial advertising. Furthermore, this art work was performed by local artists from the cities of Marietta and Atlanta. We hope to keep these works and honor their efforts.

We are willing to work with you on the remaining windows as requested. Thank you in advance for your consideration.

Sincerely yours.

Bong Hong

Kwang M Lim

V2016-10

Bill Henslee

4901 Olde Towne Parkway
Suite 155
Marietta, Georgia 30068
(770) 953-1004
FAX (770) 973-7680
MOBILE (770) 654-6351

July 13, 2016

City of Marietta
Planning and Zoning
205 Lawrence Street
Marietta, GA 30060

Ladies and Gentlemen:

I own the property at 2555 Delk Road that includes that portion of the structure that also includes the building known a Mink's. Mr. Hong has recently made material improvements to his building and I support his plan to install and maintain photos and promotional material in his windows.

All his windows are on the second or upper floor of the structure and thus do not lend themselves to traditional merchandising methods. Absent these promotional signs all that would be seen are the backs of display cases or coolers.

Though he and I have differences on operational and maintenance features of his renovations, I think the exterior appearance is terrific and I support and endorse his plans for the windows.

Sincerely,

Bill Henslee
Delk Village, LLC

TO: **Marietta Daily Journal**

FROM: **City of Marietta**

RUN DATE: **August 12, 2016**

PUBLIC NOTICE OF VARIANCES

The City of Marietta hereby gives notice that a public hearing will be held to give consideration to the following variance requests. The Board of Zoning Appeals will consider the following requests on **Monday, August 29, 2016 at 6:00 P.M.,** City Hall. Anyone wishing to attend may do so and be heard relative thereto.

V2016-10 [VARIANCE] BONG HONG is requesting variances for property located in Land Lot 858, District 17, Parcel 0080, 2nd Section, Marietta, Cobb County, Georgia and being known as 2565 Delk Road. Variance to allow more than 50% of the windows containing signage to account for more than 50% of the window face; variance to allow wall signage to cover more than 15% and/or 5% of the wall face. Ward 6A.

A description and plat of the property sought for the variances are on file in the Planning and Zoning Office, City Hall, and are available for inspection between 8:00 A.M. and 5:00 P.M., Monday through Friday. Anyone wishing to attend may do so and be heard relative thereto.

For additional information please call the Planning and Zoning Office (770) 794-5669.

Accessibility to Meetings: If you believe you may need the City/BLW to provide special accommodations in order to attend/or participate in any of the above meetings, please call Mr. Patrick Henley, ADA Coordinator, at 770-794-5558 (voice) or 770-794-5560 (TDD) no later than 48 hours before the date of the above meeting.

City of Marietta
205 Lawrence Street
Marietta, Georgia 30060

Variance

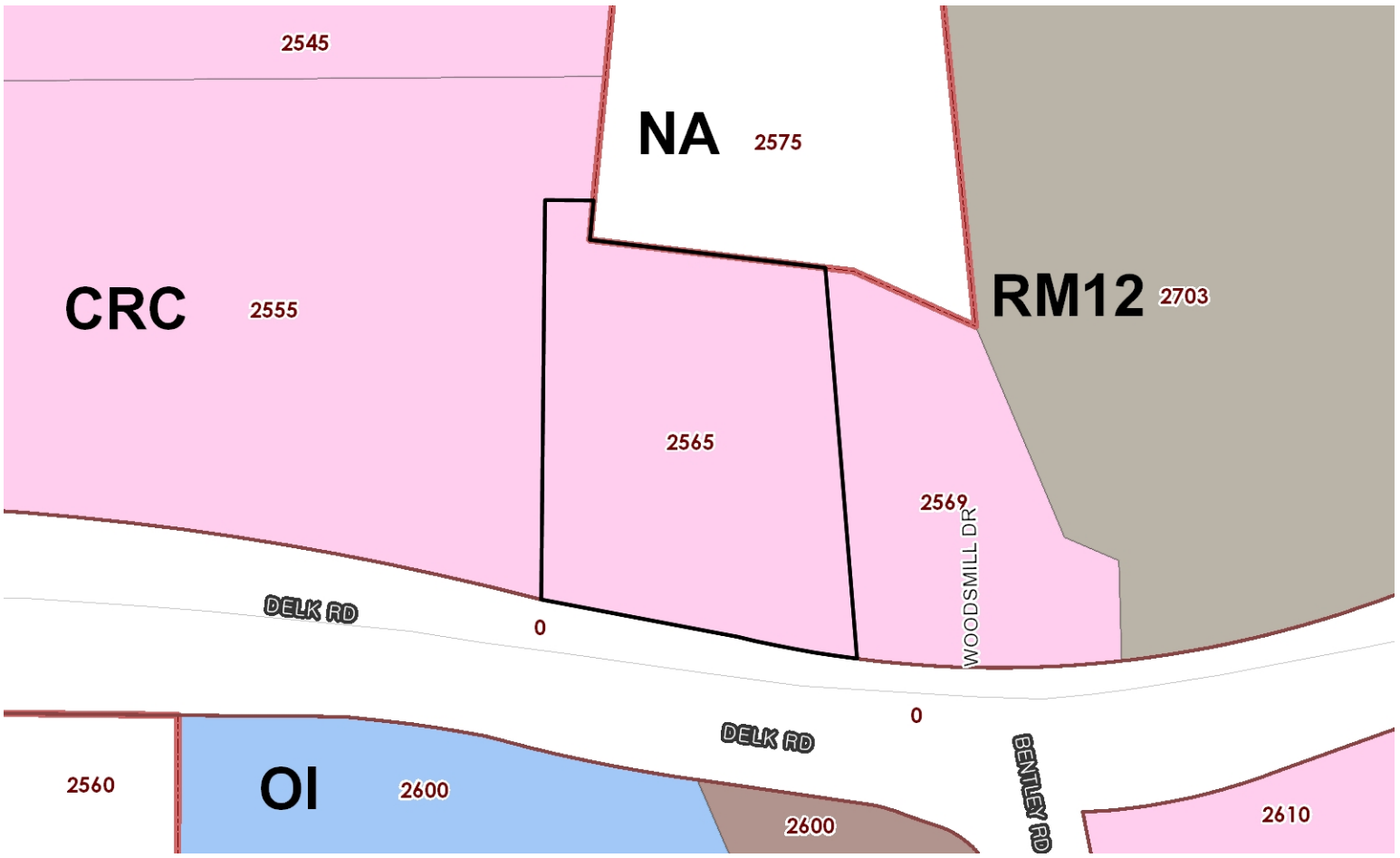

Address	*Parcel Number*	*Acreage*	*Ward*	*Zoning*	*FLU*
2565 DELK RD HM	17085800080	0.931	6A	CRC	CAC

Property Owner:	Bong Hong
Applicant:	Kwang M. Lim/Randy Hoeptner
BZA Hearing Date:	08/29/2016
Acquisition Date:	
Case Number:	V2016-10

City of Marietta Planning & Zoning

Zoning Symbols

- Railroads
- City Limits
- Cobb County Pockets
- NA
- R1 - Single Family Residential (1 unit/acre)
- R2 - Single Family Residential (2 units/acre)
- R3 - Single Family Residential (3 units/acre)
- R4 - Single Family Residential (4 units/acre)
- RA4 - Single Family Residential - Attached
- RA6 - Single Family Residential - Attached
- RA8 - Single Family Residential - Attached
- MHP - Moble Home Park
- PRD-SF - Planned Residential Dev. Single Family
- RM8 - Multi Family Residential (8 units/acre)
- RM10 - Multi Family Residential (10 units/acre)
- RM12 - Multi Family Residential (12 units/acre)
- RHR - Residential High Rise
- PRD-MF - Planned Residential Dev Multi Family
- NRC - Neighborhood Retail Commercial
- CRC - Community Retail Commercial
- RRC - Regional Retail Commercial
- PCD - Planned Commercial Development
- LI - Light Industrial
- HI - Heavy Industrial
- PID - Planned Industrial Development
- MXD - Mixed Use Development
- CBD - Central Business District
- OIT - Office Institutional Transitional
- LRO - Low Rise Office
- OI - Office Institutional
- OS - Office Services
- OHR - Office High Rise

MINK'S PACKAGE STORE
FRONT ELEVATION COSMETIC CHANGE
2565 DELK RD.
MARIETTA, GA 30067

GENERAL NOTES

1. DO NOT SCALE DRAWINGS. USE DIMENSIONS ONLY
2. ALL DIMENSIONS MUST BE VERIFIED ON THE JOB SITE AND THE ARCHITECT MUST BE NOTIFIED OF AN DISCREPANCIES BEFORE PROCEEDING WITH THE WORK
3. ALL DIMENSIONS ARE WITNESSED TO THE OUTSIDE FACE OF C.M.U. OR STUD, CENTER OF COLUMNS, TOP OF STRUCTURAL CONCRETE SLAB OR CENTERLINE OF WINDOWS AND DOORS UNLESS NOTED OTHERWISE.
4. PLANS HAVE BEEN PREPARED USING INFORMATION AVAILABLE AT THE TIME OF DRAWING PREPARATION. EXISTING CONDITIONS MAY EXIST WHICH HAVE NOT BEEN DOCUMENTED. CONTRACTOR IS REQUIRED TO MAINTAIN CONTACT WITH ARCHITECT TO INFORM HIM OF CONDITIONS WHICH ARE UNCOVERED DURING CONSTRUCTION, WHICH WILL ALTER THE DESIGN INTENT AND/OR ANY FIRE AND LIFE SAFETY ASPECTS OF THE FINAL RENOVATION.
5. IT IS THE INTENT OF THESE DOCUMENTS AND THE OWNER & ARCHITECT TO COMPLY WITH ALL CODES AN ORDINANCE IN EFFECT AT THE TIME OF PREPARATION OF THESE DOCUMENTS. THE CONTRACTOR SHALL NOTIFY THE OWNER AND ARCHITECT OF ANY CONDITIONS, WHICH HE BELIEVES TO BE IN NONCOMPLIANCE WITH SUCH CODES AND ORDINANCES, AS SOON AS SUCH NONCOMPLIANCE IS REALIZED.
6. DIMENSIONS ARE BASED ON INFORMATION OBTAINED AND NOT NECESSARILY FIELD VERIFIED. THE CONTRACTOR SHALL VERIFY ALL DIMENSIONS AND NOTIFY THE ARCHITECT OF ANY DISCREPANCIES IMMEDIATELY.
7. THE CONTRACTOR SHALL MAINTAIN CONTACT WITH LOCAL OFFICIALS AND NOTIFY THEM OF ANY CHANGING CONDITIONS AS REQUIRED. THE CONTRACTOR SHALL NOTIFY THE ARCHITECT OF ANY DEVIATIONS FROM OR MODIFICATIONS TO THE DOCUMENTS REQUIRED DUE TO UNFORESEEN CONDITIONS WHICH MAY REQUIRE RESUBMISSION TO LOCAL OFFICIALS.
8. THE CONTRACTOR SHALL GENERATE AND PERIODICALLY UPDATE A PROJECT SCHEDULE THROUGHOUT THE DURATION OF THE WORK. THE SCHEDULE SHALL BE UPDATED WEEKLY AND GIVEN TO THE OWNER.
9. THE CONTRACTOR SHALL MAINTAIN THE JOB SITE IN A CLEAN AND ORDERLY FASHION THROUGHOU CONSTRUCTION. TRASH, WASTE, AND DEBRIS SHALL BE REMOVED DAILY.
10. THE CONTRACTOR IS RESPONSIBLE FOR THE COORDINATION OF ALL PARTS OF THE WORK SO THAT NO WORK SHALL BE LEFT IN AN UNFINISHED OR INCOMPLETE CONDITION, OWNING OT ANY DISAGREEMENT BETWEEN THE VARIOUS SUBCONTRACTORS, OR THE SUBCONTRACTORS AND THE CONTRACTOR AS TO WHERE THE WORK OF ONE BEGINS OR ENDS IN RELATION TO THE WORK OF THE OTHER.
11. ALL WORK SHALL CONFIRM TO APPLICABLE INDUSTRY AND MANUFACTURER'S PUBLISHED STANDARDS FOR QUALITY OF MATERIALS AND WORKMANSHIP, AS WELL AS ALL REQUIREMENTS IN THESE DRAWINGS AND SPECIFICATIONS. ANY CONFLICTING REQUIREMENTS OF THE SOURCES LISTED ABOVE SHALL BE BROUGHT TO THE ARCHITECT ATTENTION PRIOR TO PROCEEDING WITH WORK.
12. THE CONTRACTOR SHALL PROTECT EXISTING WORK AND OTHER NEW WORK BY OTHER CONTRACTORS. THE CONTRACTOR SHALL BE RESPONSIBLE FOR ANY DAMAGE TO EXISTING WORK OR WORK BY OTHERS INCURRED WHILE FULFILLING THE OBLIGATIONS OF THIS CONTRACT.
13. NO WORK SHALL BEGIN UNTIL A BUILDING PERMIT HAS BEEN ISSUED.
14. GENERAL CONTRACTOR SHALL PROVIDE GENERAL LIABILITY INSURANCE, WORKMEN COMPENSATION INSURANCE AND LIABILITY INSURANCE BEFORE PERFORMING ANY WORK IN THIS BUILDING.
15. ALL NOTES HEREIN MENTIOKED ALONG WITH THOSE ON THE VARIOUS DRAWINGS SHALL APPLY TO ALL DRAWINGS AND FORM PART OF THE CONTRACT.
16. THE CONTRACTOR SHALL PROVIDE ALL THE LABOR AND MATERIAL NECESSARY FOR THE COMPLETION OF THE WORK AS SHOWN ON THE DRAWINGS.
17. THE CONTRACTOR SHALL BE SOLEY RESPONSIBLE FOR ANY AND ALL DAMAGE TO NEW OR EXISTING CONDITIONS CAUSED BY HIMSELF, HIS WORKMEN, OR HIS SUBCONTRACTOR. HE SHALL REPAIR SUCH DAMAGE AT NO ADDITIONAL COST TO THE OWNER UNLESS NOTHED IN WRITING PRIOR TO STARTING WORK.
18. ALL MATERIALS AND CONSTRUCTION TO BE INCORPORATED IN THE WORK SHALL BE IN STRICT ACCORDANE WITH THE LATEST EDITION OF THE ASTM SPECIFICATIONS APPLICABLE AND TO CONFORM TO THE STANDARDS AND RECOMMENDATIONS OF THE VARIOUS TRADE INSTITUTES (ACI, AISC, ETC) WHERE APPLICABLE. ALL AMTERIALS INCORPORATED INTO THE WORK SHALL BE NEW, FREE FROM DEFECTS UNLESS OTHERWISE NOTED.
19. CONTRACTORS SHALL BE RESPONSIBLE FOR ADEQUATELY BRACING AND PROTECTING ALL WORK DURING CONSTRUCTION AGAINST DAMAGE, BREAKAGE, COLLAPSE, DISTORTIONS, STANDARDS AND GOOD PRACTICE. CONTRACTOR AGREES THAT HE SHALL ASSUME SOLE AND COMPLETE RESPONSIBILITY FOR THE SITE CONDITIONS DURING THE COURSE OF CONSTRUCTION OF THIS PROPERTY THAT THIS REQUIREMENT SHALL APPLY CONTINUOUSLY AND NOT BE LIMITED TO NORMAL WORKING HOURS AND THAT THE CONTRACTOR SHALL DEFEND, INDEMNIFY AND HOLD THE ARCHITECT OR ENGINEER HARMLESS FROM ANY ALL LIABILITY, REAL OR ALLEGED IN CONNECTION WITH THE PERFORMANCE OF WORK ON THIS PROJECT.

SIGNS ARE NOT APPROVED WITHIN THE SCOPE OF THIS BUILDING PERMIT. A SEPARATE SIGN LOCATION PERMIT IS REQUIRED FOR EACH SIGN.

SCOPE OF WORK

FRONT FACADE COSMETIC CHANGE.
NO ALTERATION TO THE STRUCTURE.
ALL EXISTING STRUCTURE REMAIN AS IS.
NO WORK INSIDE.

MATERIAL & ARCHITECTURAL SYMBOLS

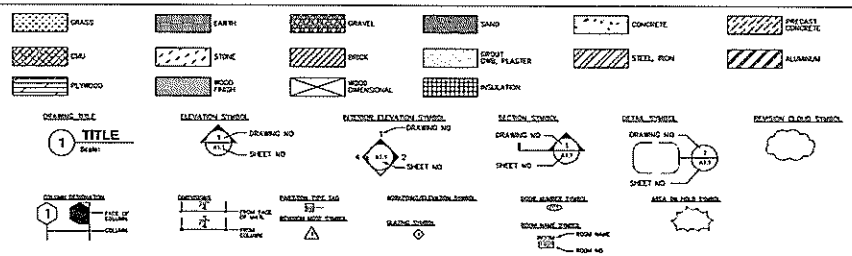

PROJECT DESCRIPTION

PROJECT NAME	MINK'S PACKAGE STORE FRONT ELEVATION COSMETIC CHANGE
AREA OF CONSTRUCTION :	EXTERIOR ELEVATION REFER TO A0.1 SCOPE OF WORK
JOB NUMBER	141701
JURISDICTION	CITY OF MARIETTA
CONSTRUCTION TYPE	TYPE II-B
HIGH-RISE	NO
2 STORY BUILDING	

LOCATION MAP

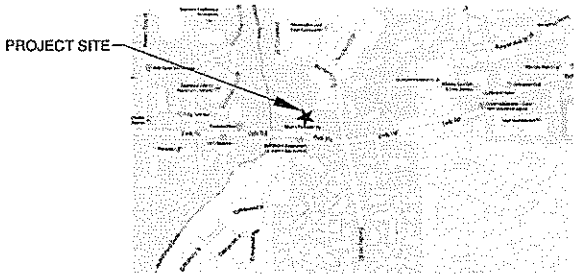

ABBREVIATIONS

AFF	ABOVE FINISHED FLOOR
ALUM.	ALUMINUM
BFV	BALL VALVE (FULL PORT)
C	CONDUIT
CO	CONDUIT ONLY
CW	COLD WATER
(E)	EXISTING
EC	ELECTRICAL CONTRACTOR
EWH	ELECTRICAL WATER HEATER
EXT.	EXTERIOR
FOF	FACE OF FINISH
FOS	FACE OF STUD
FS	FLOOR SINK
GC	GENERAL CONTRACTOR
HW	HOT WATER
ID	INDIRECT DRAIN
INT.	INTERIOR
KEC	KITCHEN EQUIP. CONTRACTOR
LL	LANDLORD
MC	MECHANICAL CONTRACTOR
(N)	NEW
NIC	NOT IN CONTRACT
NTS	NOT TO SCALE
OA	OUTSIDE AIR
OC	ON CENTER
OH	OPPOSITE HAND
PC	PLUMBING CONTRACTOR
RAR	RETURN AIR REGISTER
RI	ROUGH-IN
SIM.	SIMILAR
STRUCT.	STRUCTURE, STRUCTURAL
TYP	TYPICAL
WCO	WASTE CLEAN OUT

INDEX OF DRAWINGS

ARCHITECTURAL

A 0.0	COVER
A 0.1	SCOPE OF WORK
A 1.0	FLOOR PLAN
A 2.0	ELEVATIONS
A 3.0	SECTIONS

STRUCTURE

S 001	GENERAL NOTE
S 101	FOUNDATION/SLAB PLAN
S 503	ELEVATION/DETAILS

SITE KEY PLAN

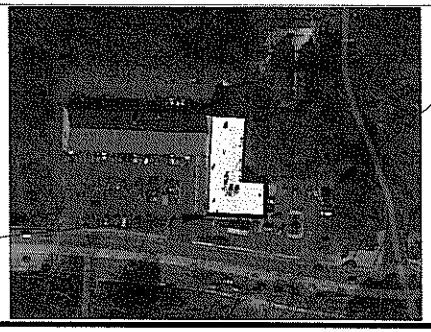

CODES & ORDINANCES

INTERNATIONAL BUILDING CODE – 2012 EDITION WITH GEORGIA AMENDMENTS

INTERNATIONAL FIRE PREVENTION CODE – 2012 EDITION WITH GEORGIA AMENDMENTS

INTERNATIONAL PLUMBING CODE – 2012 EDITION WITH GEORGIA AMENDMENTS

INTERNATIONAL MECHANICAL CODE – 2012 EDITION WITH GEORGIA AMENDMENTS

INTERNATIONAL GAS CODE – 2012 EDITION WITH GEORGIA AMENDMENTS

MODEL ENERGY CODE, 2009 EDITION WITH GEORGIA AMENDMENT

CITY OF MARIETTA COMPREHENSIVE DEVELOPMENT CODE

LIFE SAFETY CODE – 2012 EDITION WITH GEORGIA AMENDMENTS

NARIONAL ELECTRIC CODE – 2011 EDITION

GEORGIA STATE HANDICAP ACCESSIBILITY CODE – 120-3-20 (A)

PROJECT TEAM

OWNER
MICHAEL HONG
8420 ABINGDON LN.
DULUTH, GA 30097
678-485-5898

DESIGNER
YUNG ARCHITECTURE
3483 SATELLITE BLVD.
#310 SOUTH
DULUTH, GA 30096
404-808-6253

STRUCTURE ENGINEERING
3550 ENGINEERING DR.
SUITE 175
PEACHTREE CORNERS,
GA 30092
678-906-4670

JOB NUMBER : 141702
DRAWN BY : YH, HJ
CHECKED BY : YS

YUNG ARCHITECTURE
3483 Satellite Blvd. 310 South
Duluth, Georgia 30096
770-497-0404
Fax 770-497-0025
yungarchitecture@gmail.com

REVISIONS
DATE DESCRIPTION

This drawing, as an instrument of service is and shall remain the property of the Architect, and shall not be reproduced, published or used in any way without the permission of the Architect.

MINK'S PACKAGE STORE
FRONT ELEVATION COSMETIC CHANGE
2565 DELK RD.
MARIETTA, GA

COVER SHEET

A0.0

DATE : 12/03/2014

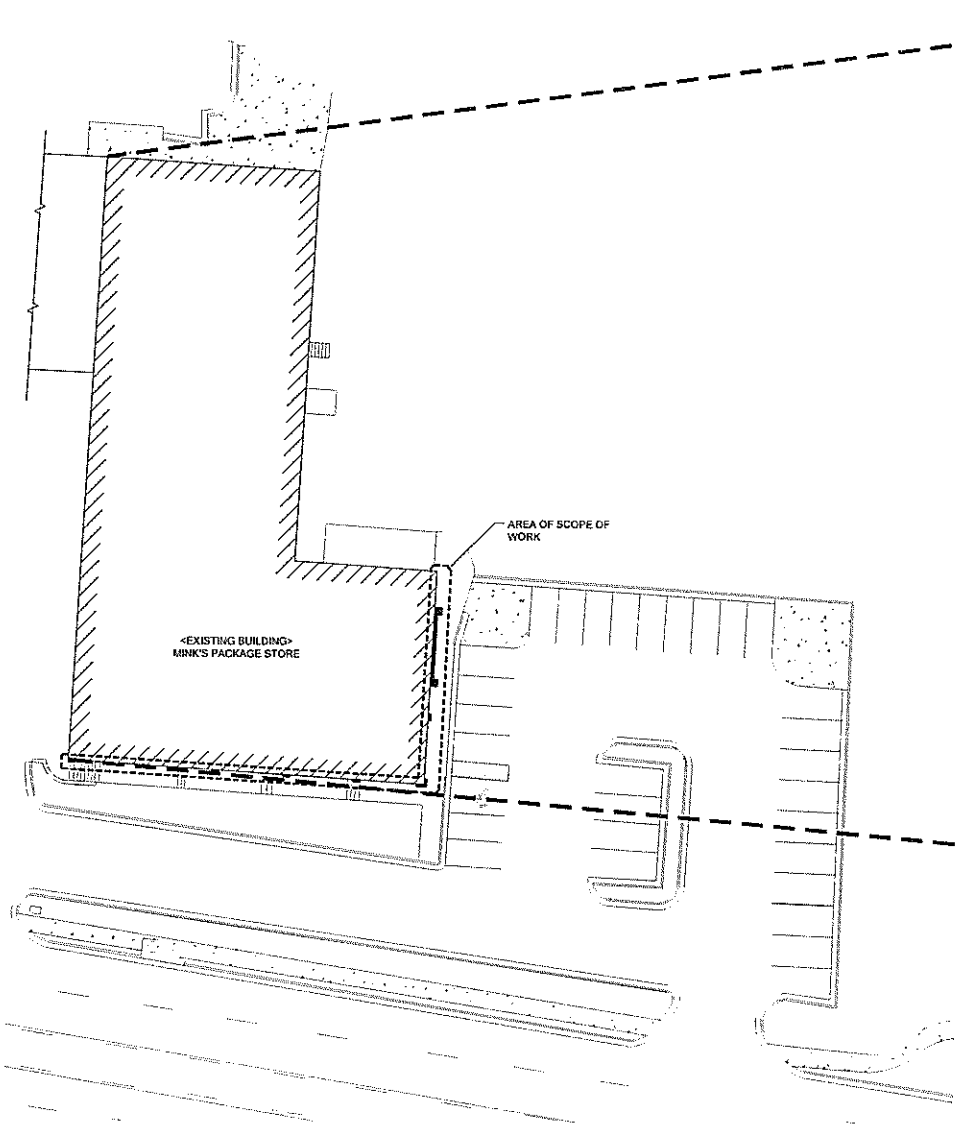

1 / A0.1 SITE PLAN
SCALE: 1/16"=1'-0"

N

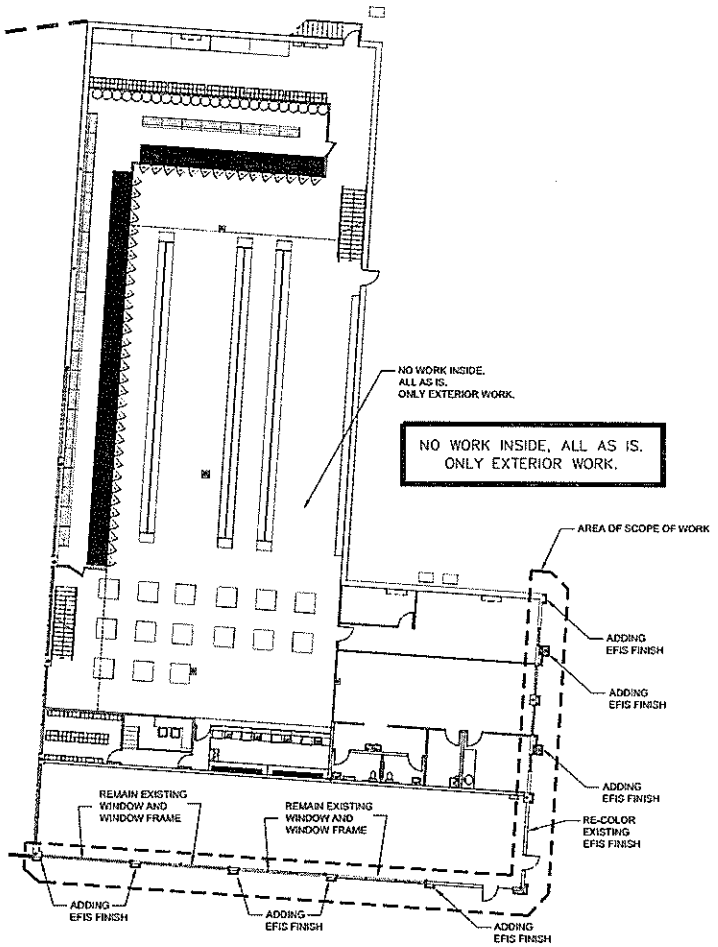

NO WORK INSIDE, ALL AS IS.
ONLY EXTERIOR WORK.

2 / A0.1 SCOPE OF WORK
SCALE: N.T.S

N

SCOPE OF WORK

FRONT FACADE COSMETIC CHANGE. NO ALTERATION TO THE STRUCTURE. ALL EXISTING STRUCTURE REMAIN AS IS. NO WORK INSIDE, ALL AS IS. ONLY EXTERIOR WORK.

JOB NUMBER : 141702
DRAWN BY : YH, HJ
CHECKED BY : YS

YUNG ARCHITECTURE
3480 Satellite Blvd. 310 South
Duluth, Georgia 30096
770-497-0404
Fax 770-497-0035
yungarchitecture@gmail.com

YUNG ARCHITECTURE

REVISIONS
DATE DESCRIPTION

This drawing as an instrument of service is and shall remain the property of the Architect, and may not be reproduced, published or used in any way without the permission of the Architect

MINK'S PACKAGE STORE
FRONT ELEVATION COSMETIC CHANGE
2565 DELK RD.
MARIETTA, GA

SCOPE OF WORK

A0.1

DATE : 12/03/2014

CONSTRUCTION NOTES

1. PLEASE BE REMINDED THAT THE SUSPENDED ACOUSTICAL CEILING, LIGHTING FIXTURES, ETC. MUST BE ATTACHED TO THE STRUCTURAL MEMBERS ONLY.
2. ANY MECHANICAL EQUIPMENT (I.E. EXHAUST FANS, HVAC UNITS, ETC.) INSTALLED BY THE TENANT MUST UTILIZE NOISE/VIBRATION ISOLATORS. DIRECT WELDING OF EQUIPMENT TO THE ROOF STRUCTURE AND/OR STRUCTURAL MEMBERS IS NOT ALLOWED.
3. REVIEW OF THE PLANS IS ONLY FOR CONFORMANCE WITH THE LEASE AGREEMENT AND COMPLIANCE WITH THE INFORMATION GIVEN IN THE CONTRACT DOCUMENTS. LANDLORD APPROVAL DOES NOT RELIEVE THE TENANT OF ANY ERRORS, INCLUDING DETAILS, FEATURES, DIMENSIONS, MATERIALS, ETC., WHICH WILL CAUSE NON-CONFORMITY WITH THE CONTRACT DOCUMENTS OR THE IMPLIED OR EXPRESSED INTENT THEREOF.
4. ANY CHANGES OF MATERIALS OR FINISHES WITHOUT OUR WRITTEN CONSENT, AND ANY FAILURE TO TIMELY COMPLY WITH THE ADDITIONAL REQUIREMENTS SET FORTH HEREIN, WILL NEGATE THE LANDLORD'S APPROVAL.
5. BEFORE CONSTRUCTION MAY COMMENCE IN THE STORE, THE FOLLOWING ITEMS MUST BE COMPLETED :
   A. THE NAMES AND ADDRESSES OF YOUR PROPOSED GENERAL CONTRACTOR AND SUBCONTRACTORS MUST BE SUBMITTED TO THE LANDLORD.
   B. TENANT'S CONTRACTOR MUST FULFILL THE INSURANCE REQUIREMENTS AS REQUIRED BY THE LEASE.
   C. TENANT MUST SUBMIT DRAWINGS TO MUNICIPALITY TO RECEIVE A PERMIT FOR TENANT'S PORTION OF WORK INCLUDING ALL FIX TURING.
   D. A COPY OF TENANT'S BUILDING PERMIT AS ISSUED BY MUNICIPALITY MUST BE DELIVERED TO THE LANDLORD AT THE ADDRESS LISTED ABOVE.
   C. THE ELECTRIC, GAS AND WATER UTILITIES FOR THE SPACE MUST BE PLACED IN THE TENANT'S OR TENANT CONTRACTOR'S NAME.
6. PRIOR TO STORE OPENING, TENANT SHALL PROVIDE A CERTIFICATE OF INSURANCE TO LANDLORD EVIDENCING PROPER INSURANCE IS IN EFFECT AS REQUIRED BY THE LEASE.
7. THE STORE FRONT IDENTIFICATION SIGN AND SIGNAGE BEHIND STOREFRONT GLASS WILL BE REVIEWED FOR APPROVAL UPON RECEIPT FROM TENANT. ANY NON-CONFORMANCE WITH SIGN CRITERIA WILL RESULT IN DISAPPROVAL OF SIGNAGE.
8. ANY WORK INVOLVING THE SPRINKLER MUST BE COORDINATED WITH THE LANDLORD.
9. GENERAL CONTRACTOR TO VERIFY LOCATION OF ALL EQUIPMENT AND MILLWORK WITH OWNER PRIOR TO INSTALLATION OF EQUIPMENT OR OUTLET.
10. CONTRACTOR TO STRIP AND CLEAN AREAS OF EXPOSED SLAB IN PREPARATION OF NEW FLOOR FINISHES. PATCH ALL HOLES AND UNEVEN CONCRETE TO PROVIDE SMOOTH SURFACE. PREP SURFACE AS REQUIRED BY MANUFACTURING REQUIREMENTS.
11. GC TO CLEAN INTERIOR WINDOWS AT THE CONCLUSION OF THE CONSTRUCTION PROCESS AS PART OF THE FINAL CLEAN.

WALL SCHEDULE

1 – EXISTING EXTERIOR WALL

2 – NEW NON RATED – 6" 20 GA METAL STUDS @ 16" O.C. MAX. W/ 3/4" EXTERIOR SHEATHING ON EXTERIOR SIDE.

DOOR AND WINDOW SCHEDULE

DOOR AND FRAME SCHEDULE

DOOR

DOOR #	SIZE	TYPE	MATERIAL	ELEVATION	FRAME	NOTES
01	3'-0" X 7'-0"	STORE FRONT	TEMPERED GLASS		ALUMINUM	NEW
02	3'-0" X 7'-0"	STORE FRONT	TEMPERED GLASS		ALUMINUM	NEW

WINDOW

DOOR #	SIZE	TYPE	MATERIAL	ELEVATION	FRAME	NOTES
W01	3'-6" X 10'-0"	STORE FRONT	TEMPERED GLASS		ALUMINUM	NEW
W02	3'-6" X 10'-0"	STORE FRONT	TEMPERED GLASS		ALUMINUM	NEW

NOTE
1. GC AND OWNER TO FIELD VERIFY ALL DIMENSIONS. INFORM ARCHITECT ANY MIS INFORMATION. THE DIMENSION HERE SHOWN MAY NOT REPRESENT THE FIELD CONDITION.
2. REFER TO SHEET A2.0 FOR DOOR ELEVATION.
3. G.C. TO FIELD VERIFY AND INSTALL DOOR SWEEPS ON ALL EXTERIOR DOORS.

ENLARGED PLAN

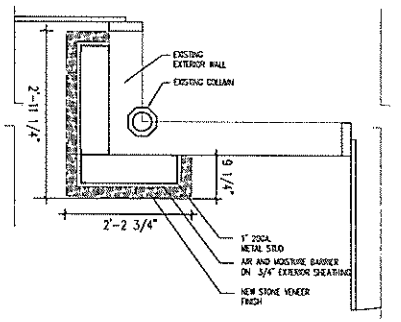

2 A1.0 ENLARGED PLAN
SCALE : 1" = 1'-0"

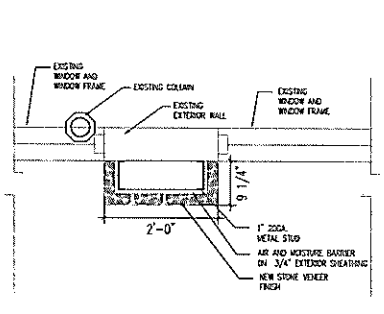

3 A1.0 ENLARGED PLAN
SCALE : 1" = 1'-0"

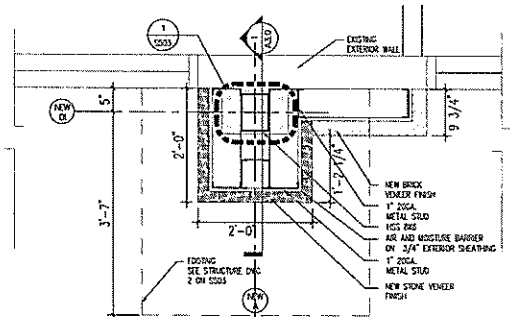

4 A1.0 ENLARGED PLAN
SCALE : 1" = 1'-0"

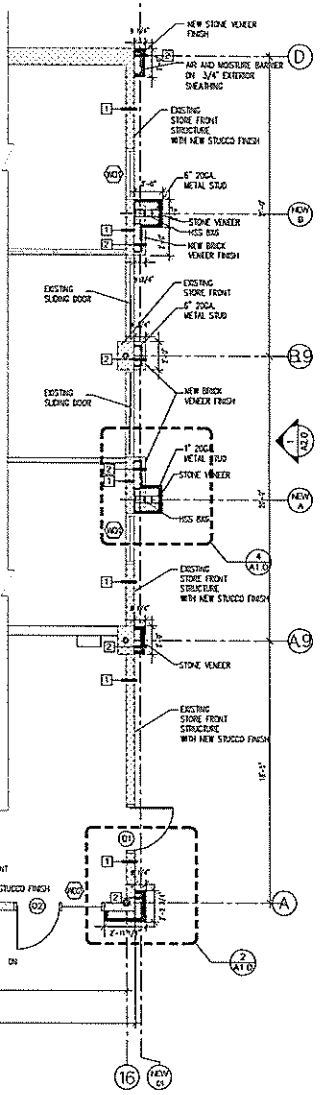

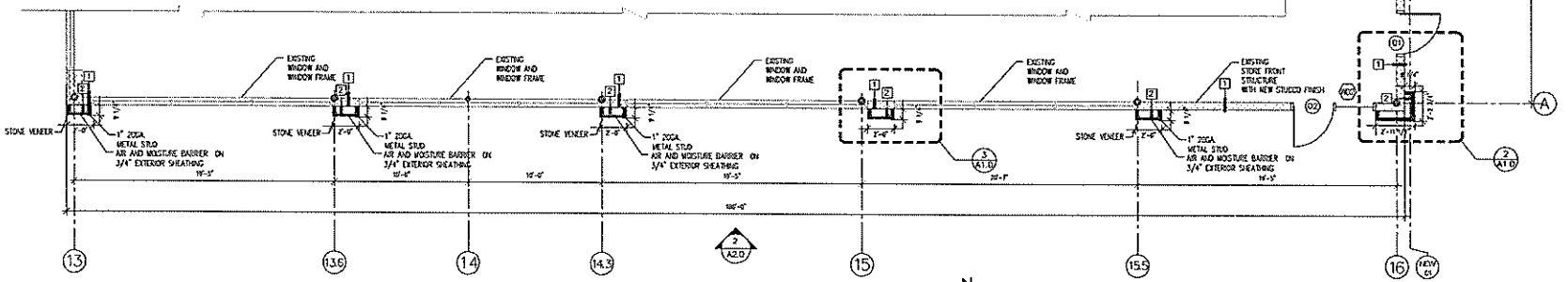

1 A1.0 FLOOR PLAN
SCALE : 1/4" = 1'-0"

N

JOB NUMBER	141701
DRAWN BY :	YH, HJ, HC
CHECKED BY :	YS

YUNG ARCHITECTURE
3483 Satellite Blvd. 310 South
Duluth, Georgia 30096
Phone. 770-497-0035
Fax. 770-497-0035
yungarchitecture@gmail.com

REVISIONS
DATE DESCRIPTION

This drawing as an instrument of service is and shall remain the property of the Architect and shall not be reproduced, published or used in any way without the permission of the Architect.

MINK'S PACKAGE STORE

2565 DELK RD.
MARIETTA, GA

FLOOR PLAN

A1.0

DATE : 05/28/2014

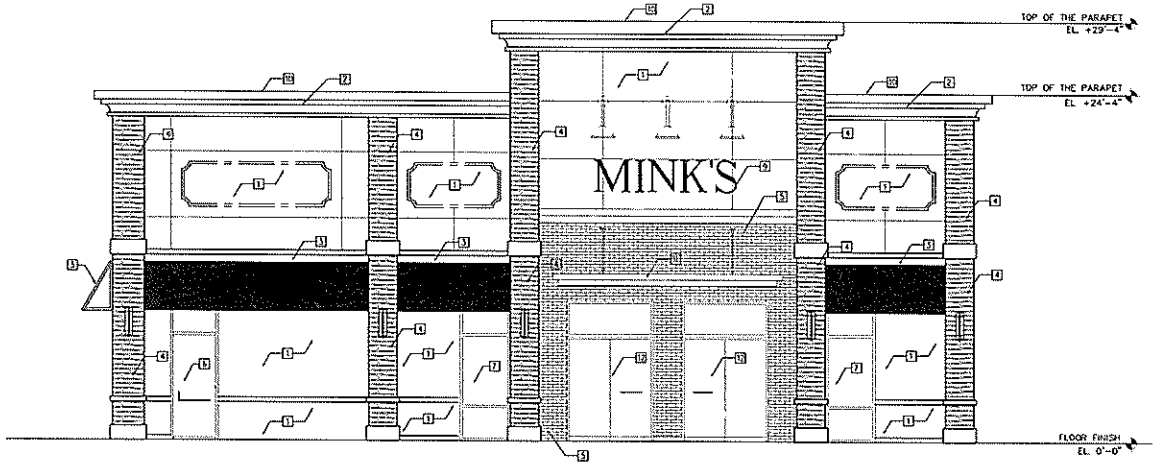

1 ELEVATION (EAST)
SCALE : 1/8"=1'-0"

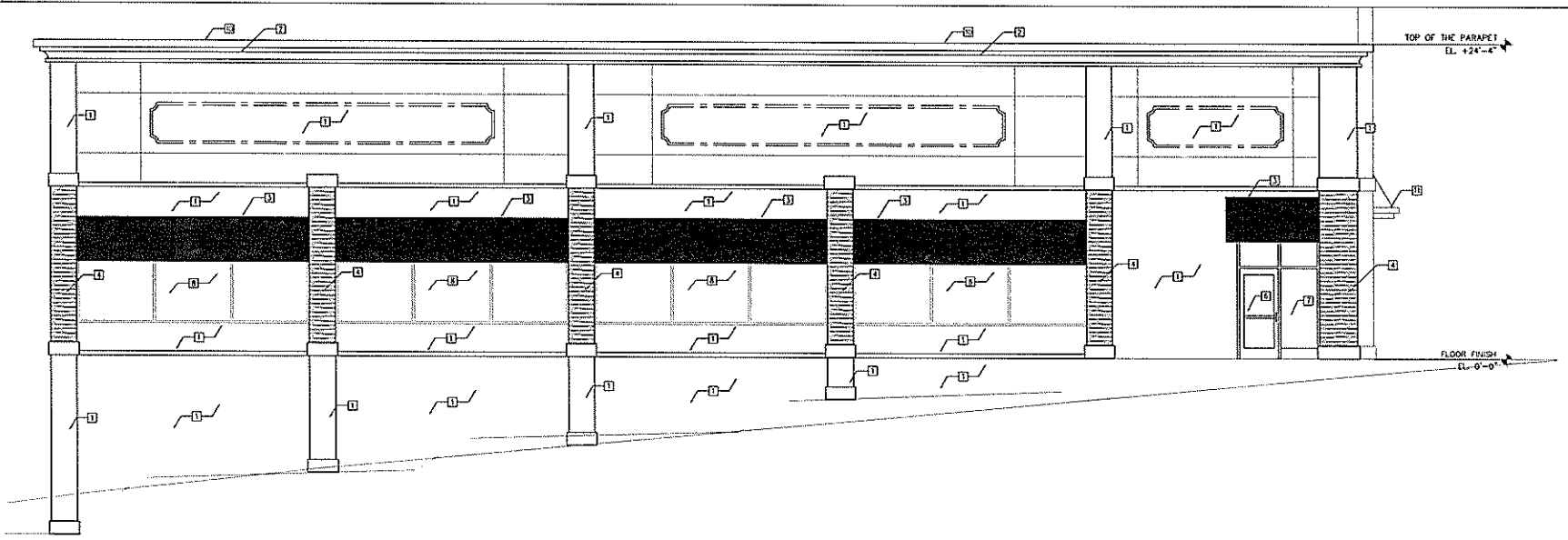

2 ELEVATION (WEST)
SCALE : 1/8"=1'-0"

ELEVATION KEYED NOTES

1. EIFS FINISH
2. EIFS TRIM SYSTEM
3. AWNING
4. STONE VENEER FINISH
5. BRICK VENEER FINISH
6. NEW DOOR
7. NEW WINDOW
8. EXISTING WINDOW
9. NEW SIGNAGE.
10. METAL COPING OVER PARAPET, MIN. 4" DRIP EDGE
11. STOREFRONT METAL AWNING
12. EXISTING SLIDING DOOR

JOB NUMBER : 141702
DRAWN BY : YH, HJ
CHECKED BY : YS

YUNG ARCHITECTURE
3483 Satellite Blvd. 310 South
Duluth, Georgia 30096
770-497-0424
Fax 770-497-0035
yungarchitecture@gmail.com

REVISIONS
DATE DESCRIPTION

The drawing, as an instrument of service is and shall remain the property of the Architects and shall not be reproduced, published or used in any way without the permission of the Architect.

MINK'S PACKAGE STORE
FRONT ELEVATION COSMETIC CHANGE
2565 DELK RD.
MARIETTA, GA

EXTERIOR
ELEVATION

A2.0

DATE : 12/03/2014

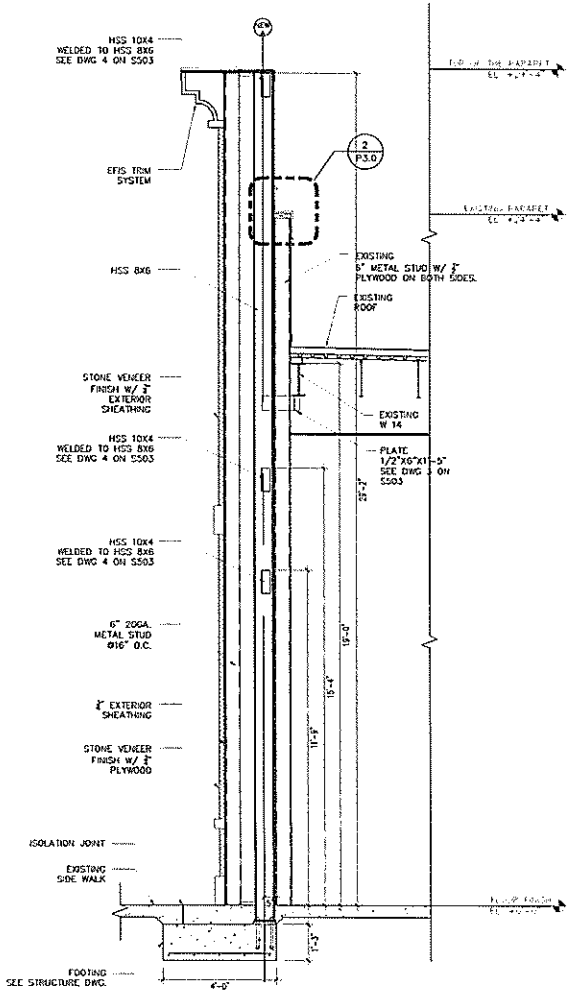

1 WALL SECTION
SCALE : 1/2"=1'-0"

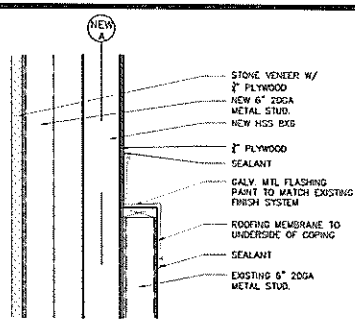

2 DETAIL
SCALE : 1"=1'-0"

3 NOT USED

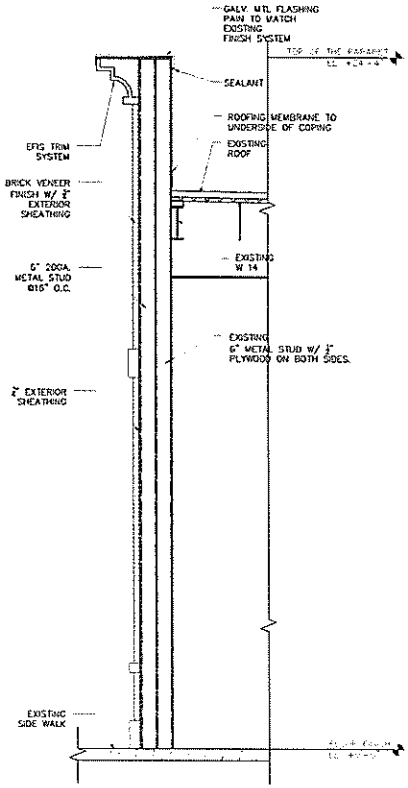

4 WALL SECTION
SCALE : 1/2"=1'-0"

5 NOT USED

JOB NUMBER : 141702
DRAWN BY : YH, HJ
CHECKED BY : YS

YUNG ARCHITECTURE
3483 Satellite Blvd. 310 South
Duluth, Georgia 30096
770-497-0404
Fax 770-497-0035
yungarchitecture@gmail.com

REVISIONS
DATE DESCRIPTION

This drawing is an instrument of service and shall remain the property of the Architects and shall not be reproduced, published or used in any way without the permission of the Architect.

MINK'S PACKAGE STORE
FRONT ELEVATION COSMETIC CHANGE
2565 DELK RD.
MARIETTA, GA

WALL
SECTION

A3.0

DATE : 12/03/2014

GENERAL

1. THE CONTRACTOR SHALL VERIFY ALL DIMENSIONS PRIOR TO STARTING WORK.
2. THE CONTRACTOR SHALL PROVIDE AND MAINTAIN ADEQUATE ERECTION SHORING AND BRACING AS REQUIRED FOR STABILITY OF ALL STRUCTURES AND EMBANKMENTS DURING ALL PHASES OF CONSTRUCTION.
3. IN NO CASE SHALL WORKING DIMENSIONS BE SCALED FROM PLANS, SECTIONS, OR DETAILS ON THE DRAWINGS.
4. BEFORE COMMENCING ANY EXCAVATION, THE CONTRACTOR SHALL VERIFY THE LOCATION OF ALL UNDERGROUND UTILITIES AND SHALL NOT PERFORM ANY WORK THAT WILL DAMAGE OR INTERFERE WITH THEIR SERVICE.
5. THE CONTRACTOR SHALL TAKE PRECAUTIONS TO PROTECT ALL EXISTING FACILITIES AND UTILITIES AND SHALL NOT PERFORM ANY WORK THAT WILL DAMAGE OR INTERFERE WITH THEIR SERVICE.
6. THE CONTRACT STRUCTURAL DRAWINGS REPRESENT THE FINISHED STRUCTURES. THESE DO NOT INDICATE METHODS OF CONSTRUCTION. THE CONTRACTOR SHALL PROVIDE ALL MEASURES NECESSARY TO PROTECT EXISTING AND NEW STRUCTURES DURING CONSTRUCTION. SUCH MEASURES SHALL INCLUDE, BUT NOT LIMITED TO, BRACING, SHORING, ETC, FOR ALL CONSTRUCTION PHASE LOADS.
7. DURING THE ENTIRE CONSTRUCTION PERIOD, IT SHALL BE THE CONTRACTOR'S RESPONSIBILITY TO MAINTAIN CONDITIONS AT THE JOB SITE SO AS TO MEET IN ALL RESPECTS ALL APPLICABLE SAFETY LAWS, RULES, ORDINANCES AND REGULATIONS. THIS PROVISION SHALL APPLY TO ALL PERSONNEL EMPLOYED OR SUPERVISED BY THE CONTRACTOR AT THE JOB SITE.
8. ALL WORK SHALL BE PERFORMED IN COMPLIANCE WITH THE LATEST EDITION OF THE BUILDING CODE.
9. ALL STRUCTURAL OPENINGS AROUND OR AFFECTED BY MECHANICAL, ELECTRICAL, OR PLUMBING EQUIPMENT SHALL BE VERIFIED WITH EQUIPMENT PURCHASED BEFORE PROCEEDING WITH STRUCTURAL WORK AFFECTED.
10. ANY ENGINEERING DESIGN PROVIDED BY OTHERS AND SUBMITTED FOR REVIEW SHALL BEAR THE SEAL OF AN ENGINEER REGISTERED IN THE STATE OF THE PROJECT.
11. THE GENERAL CONTRACTOR MUST REVIEW AND APPROVE SHOP DRAWINGS PRIOR TO SUBMITTAL TO ARCHITECT/ENGINEER. SUBMITTALS WHICH DO NOT CONTAIN THE CONTRACTOR'S SHOP DRAWING STAMP OR HAVE BEEN MERELY "RUBBER STAMPED" SHALL BE RETURNED WITHOUT REVIEW.
12. IF ANY DISCREPANCIES ARE NOTED BETWEEN SPECIFICATIONS, NOTES, OR DRAWINGS, THE MORE STRINGENT REQUIREMENT SHALL GOVERN.
13. REVIEW OF THE SUBMITTAL INFORMATION BY THE ARCHITECT/ENGINEER SHALL BE FOR THE GENERAL REQUIREMENTS OF THE PROJECT AND SHALL NOT INCLUDE CHECKING OF DETAILED DIMENSIONS, DETAILED QUANTITIES, OR CONTRACTOR'S SAFETY MEASURES ON OR OFF THE WORK-SITE, OR THE MEANS AND METHODS OF DOING ANY WORK.

STRUCTURAL STEEL

1. EXCEPT AS OTHERWISE INDICATED, ALL STRUCTURAL STEEL FABRICATION AND ERECTION SHALL BE PERFORMED IN ACCORDANCE WITH THE AISC SPECIFICATION FOR STRUCTURAL STEEL BUILDINGS AND CODE OF STANDARD PRACTICE FOR STEEL BUILDINGS AND BRIDGES AS CONTAINED IN THE THIRTEENTH EDITION OF THE STEEL CONSTRUCTION MANUAL.
2. FABRICATORS AND ERECTORS SHALL BE MEMBERS OF THE A.I.S.C. OR CERTIFIED FOR CATEGORY I, A.I.S.C. QUALITY CERTIFICATION PROGRAM OR HAVE HAD AT LEAST 10 YEARS EXPERIENCE IN FABRICATION AND ERECTION OF SIMILAR STEEL STRUCTURES.
3. SHOP DRAWINGS FOR ALL STRUCTURAL STEEL SHALL BE SUBMITTED AND APPROVED PRIOR TO ANY FABRICATION.
4. ALL METAL STAIRS, HANDRAILS, LADDERS AND OTHER MISCELLANEOUS STEEL SHALL BE DESIGNED BY A SPECIALITY ENGINEER LICENSED IN THE STATE OF THE PROJECT. THESE SIGNED & SEALED DRAWINGS SHALL BE SUBMITTED TO THE STRUCTURAL ENGINEER FOR APPROVAL PRIOR TO ANY FABRICATION.
5. STRUCTURAL STEEL FRAMING SHALL BE ERECTED TRUE AND PLUMB IN ACCORDANCE WITH A.I.S.C. CODE OF STANDARD PRACTICE. ANY FRAMING EXCEEDING TOLERANCES OF THE CODE OF STANDARD PRACTICE SHALL BE CORRECTED AS DIRECTED BY THE STRUCTURAL ENGINEER.
6. BEAMS SHALL BE FABRICATED AND ERECTED WITH NATURAL CAMBER UP.
7. STEEL FRAMING CONNECTIONS SHALL BE BOLTED OR WELDED. BOLTS SHALL BE A MINIMUM OF 3/4" DIAMETER ASTM A325 BOLTS UNLESS NOTED OTHERWISE. ALL BOLTED CONNECTIONS SHALL BE "SNUG TIGHT" UNLESS NOTED OTHERWISE. THE CONTACT SURFACES WITHIN SLIP CRITICAL JOINTS SHALL BE FREE FROM OIL, PAINT, LACQUER OR GALVANIZING.
8. BOLTS SHALL CONFORM TO ASTM A325 OR A490 AND SHALL BE PER THE FOLLOWING, UNLESS OTHERWISE NOTED:

   MINIMUM BOLT DIAMETER SHALL BE ¾"

   MINIMUM TWO (2) BOLTS PER CONNECTED MEMBER

   BOLT HOLES SHALL BE 1/16" OVERSIZE

   USE FULLY TENSIONED A325SC OR A490SC BOLTS FOR BRACING, MOMENT CONNECTIONS, CANTILEVERS, TENSION MEMBERS AND AT OVERSIZED OR SLOTTED HOLES WHERE THE FORCE ON THE JOINT IS NOT NORMAL TO THE AXIS OF THE SLOT; USE A325N OR A490N ELSEWHERE.

   BOLTS IN CONNECTIONS NOT WITHIN THE SLIP CRITICAL, NOR SUBJECT TO TENSION LOADS, NOR REQUIRED TO BE FULLY TENSIONED BEARING TYPE CONNECTIONS NEED ONLY BE TIGHTENED TO THE SNUG TIGHT CONDITION. SNUG TIGHT CONDITION IS DEFINED AS THE TIGHTNESS THAT EXISTS WHEN ALL PLIES IN A JOINT ARE IN FIRM CONTACT. THIS MAY BE ATTAINED BY A FEW IMPACTS OF AN IMPACT WRENCH OR THE FULL EFFORT OF A MAN USING AN ORDINARY SPUD WRENCH.
9. UNLESS OTHERWISE SHOWN, ALL BEAM CONNECTIONS SHALL BE STANDARD FRAMED OR SEATED CONNECTIONS. UNLESS GREATER REACTIONS ARE INDICATED ON THE PLANS, CONNECTIONS SHALL DEVELOP AT LEAST 60% OF THE TOTAL UNIFORM LOAD CAPACITY TABULATED IN THE TABLES OF THE MANUAL FOR THE GIVEN SHAPE AND SPAN OF THE BEAM IN QUESTION. IN NO CASE, HOWEVER, SHALL THE LENGTH OF THE FRAMED CONNECTIONS BE LESS THAN ONE-HALF OF THE "T" DISTANCE OF THE BEAM WEB.
10. WELDING SHALL BE DONE BY A.W.S. QUALIFIED WELDERS IN CONFORMANCE WITH A.W.S. D1.1 AND SHALL BE CONTINUOUS UNLESS OTHERWISE NOTED:

ELECTRODES	E70 SERIES ELECTRODES
FILLET WELDS	AISC MINIMUM BUT NOT LESS THAN 3/16"
GROOVE WELDS	FULL PENETRATION, UNLESS OTHERWISE NOTED

11. STEEL EXPOSED TO WEATHER SHALL BE GALVANIZED AS FOLLOWS:

    STEEL SECTIONS, PLATES, BARS AND RODS SHALL BE HOT-DIPPED GALVANIZED AFTER FABRICATION IN CONFORMANCE WITH ASTM A153.

    STEEL BOLTS, NUTS AND WASHERS SHALL BE HOT-DIPPED GALVANIZED IN CONFORMANCE WITH ASTM A153.

    GALVANIZED COATINGS DAMAGED BY TRANSPORTING, HANDLING, CUTTING, BOLTING OR WELDING SHALL BE REPAIRED USING ASTM A780 ZINC-RICH PAINT FOR GALVANIZING.

    ALL VENT HOLES SHALL BE PLUG OR SEAL WELDED PRIOR TO ERECTION.
12. STRUCTURAL STEEL EMBEDDED IN CONCRETE SHALL NOT BE PAINTED.
13. SHOP OR FIELD SPLICES NOT SHOWN ON THE CONTRACT DOCUMENTS SHALL BE SUBMITTED TO THE STRUCTURAL ENGINEER FOR APPROVAL.
14. WHERE PRACTICAL, UNLESS SHOWN DIFFERENTLY ON DRAWINGS, ALL BRACING CONNECTIONS SHALL BE DESIGNED AND DETAILED SO THAT ALL FORCE COMPONENTS CAN BE DELIVERED DIRECTLY TO THE CENTERLINE OF INTERSECTING MEMBERS. WHERE THIS IS NOT DONE, CONNECTIONS SHALL BE DESIGNED TO ACCOUNT FOR RESULTING ECCENTRICITIES.
15. GUSSET PLATES SHALL BE 3/8" THICK MINIMUM.

POST-INSTALLED ANCHORS

II. POST-INSTALLED ANCHORS AND DOWELS

1. EXPANSION ANCHORS SHALL BE ONE OF THE FOLLOWING:
   - A. CONCRETE:
     - a. KWIK BOLT TZ, HILTI INC.
     - b. STRONG-BOLT 2, SIMPSON STRONG-TIE
   - B. GROUTED MASONRY
     - a. KWIK BOLT 3, HILTI INC.
     - b. WEDGE-ALL, SIMPSON STRONG-TIE
2. ADHESIVE ANCHORS SHALL BE ONE OF THE FOLLOWING:
   - A. CONCRETE:
     - a. HIT-RE 500-SD, HILTI INC.
     - b. SET-XP, SIMPSON STRONG-TIE
   - B. GROUTED MASONRY
     - a. HIT-HY 150 MAX, HILTI INC.
     - b. SET, SIMPSON STRONG-TIE
3. ANCHORS OF THE SIZE AND EMBEDMENT SHOWN ON THE DRAWINGS SHALL BE INSTALLED IN ACCORDANCE WITH THE CONTRACT DOCUMENTS, THE MANUFACTURER'S RECOMMENDATIONS, AND THE MANUFACTURER'S CURRENT ICC ES REPORT FOR THE ANCHOR. IF CONFLICTS EXIST BETWEEN THESE REFERENCED DOCUMENTS, THE MOST STRINGENT REQUIREMENTS SHALL GOVERN.
4. THE CONTRACTOR SHALL LOCATE ALL EXISTING REINFORCING STEEL AND OTHER EMBEDDED ITEMS CONTAINED IN THE CONCRETE USING NON-DESTRUCTIVE METHODS AND SHALL POSITION ANCHOR LOCATIONS TO AVOID CONFLICTS WITH EXISTING EMBEDDED ITEMS. ANCHOR LOCATIONS CAN BE ADJUSTED BY A MAXIMUM OF 1 1/2" FROM DETAILED LOCATIONS TO AVOID CONFLICTS, UNLESS NOTED OTHERWISE. SUBMIT AN AS-BUILT OF ANCHOR LOCATIONS TO ENGINEER.
5. BASED ON FIELD VERIFIED LOCATIONS OF REINFORCING STEEL AND EMBEDDED ITEMS, THE CONTRACTOR SHALL CREATE TEMPLATES FOR EACH ANCHOR GROUP. SUBMIT TEMPLATE DIMENSIONS FOR REVIEW PRIOR TO FABRICATION OF CONNECTION PLATES.
6. HOLES FOR ANCHORS SHALL BE DRILLED IN A CONTINUOUS OPERATION USING THE BIT TYPE AND SIZE RECOMMENDED BY THE ANCHOR MANUFACTURER. HOLES SHALL BE DRILLED PERPENDICULAR TO THE CONCRETE SURFACE AND SHALL NOT BE ENLARGED OR REDIRECTED AT ANY POINT ALONG ITS LENGTH. ALL DEBRIS SHALL BE BLOWN OUT OF THE HOLES WITH COMPRESSED AIR AFTER DRILLING.
7. ALL ABANDONED HOLES SHALL BE FILLED WITH NONSHRINK GROUT.
8. HOLES IN CONNECTION PLATES SHALL BE NO MORE THAN 1/16" LARGER THAN THE ANCHOR DIAMETER. IF LARGER HOLES ARE REQUIRED FOR ERECTION PURPOSES, CONTRACTOR SHALL NOTIFY ENGINEER SUCH THAT A PLATE WASHER SIZE CAN BE PROVIDED.
9. INSTALLATION OF ANCHORS SHALL BE CONTINUOUSLY INSPECTED BY THE TESTING AGENCY TO ENSURE THAT HOLES ARE OF SPECIFIED SIZE, AND THAT BOLTS ARE PROPERLY INSTALLED INCLUDING APPLICATION OF MINIMUM INSTALLATION TORQUES.

DESIGN CRITERIA

DESIGN DATA:	
CODE	2012 INTERNATIONAL BUILDING CODE W/ GEORGIA AMMENDMENTS
WIND DESIGN:	
ULTIMATE WIND SPEED	115 MPH
NORMINAL WIND SPEED	90 MPH
ENCLOSURE CLASSIFICATION	ENCLOSED BUILDING
EXPOSURE	C
RISK CATEGORY	II
INTERNAL PRESSURE COEFFICIENT	±0.18
SEISMIC DESIGN:	
RISK CATEGORY	II
SITE CLASS	D
IMPORTANCE FACTOR	1.0
SPECTRAL RESPONSE COEFFICIENTS	S_S = 0.192g S_{DS} = 0.205g S_1 = 0.091g S_{D1} = 0.146g
SEISMIC DESIGN CATEGORY	C
SEISMIC FORCE-RESISTING SYSTEM	STEEL ORDINARY CONCENTRICALLY BRACED FRAMES
DESIGN BASE SHEAR	V=0.063W
SEISMIC RESPONSE COEFFICIENT	C_s =0.063
ANALYSIS PROCEDURE USED	EQUIVALENT LATERAL-FORCE ANALYSIS
LIVE LOADS:	
STAIRS AND LANDINGS	100 PSF
PLATFORMS	125 PSF
HANDRAILS	50 PLF / 200 LB
MATERIALS:	
WIDE FLANGE STEEL	A572 OR A992 (50 KSI)
CHANNELS, ANGLES & PLATES	A36 (36 KSI)
STANDARD PIPE	A53 GRADE B (46 KSI)
HIGH STRENGTH BOLTS	A325N, A325TC

ENGQUEST
3550 ENGINEERING DRIVE, SUITE 175
PEACHTREE CORNERS, GA 30092
TEL: (678) 906-4670
www.engquest.com

STRUCTURAL NOTES

JOB NUMBER : 141701
DRAWN BY : YH, HJ, HC
CHECKED BY : YS

YUNG ARCHITECTURE
3483 Satellite Blvd. 310 South
Duluth, Georgia 30096
770-497-0404
Fax 770-497-0035
yungarchitecture@gmail.com

REVISIONS DATE	DESCRIPTION
09/19/14	ISSUE FOR REVIEW
09/24/14	CONSTRUCTION ISSUE

This drawing, as an instrument of service, is and shall remain the property of the Architects and shall not be reproduced, published or used in any way without the permission of the Architect.

MINK'S PACKAGE STORE
2565 DELK RD.
MARIETTA, GA

07/25/2014
2014-0074

S001

DATE : 05/28/2014

FOR CONSTRUCTION

FOOTING SCHEDULE							
MARK	SIZE			REINFORCEMENT			
	LENGTH	WIDTH	DEPTH	BOT. (LG.)	BOT. (SH.)	TOP (LG.)	TOP (SH.)
F4.0	4'-0"	4'-0"	1'-3"	5-#5	5-#5		

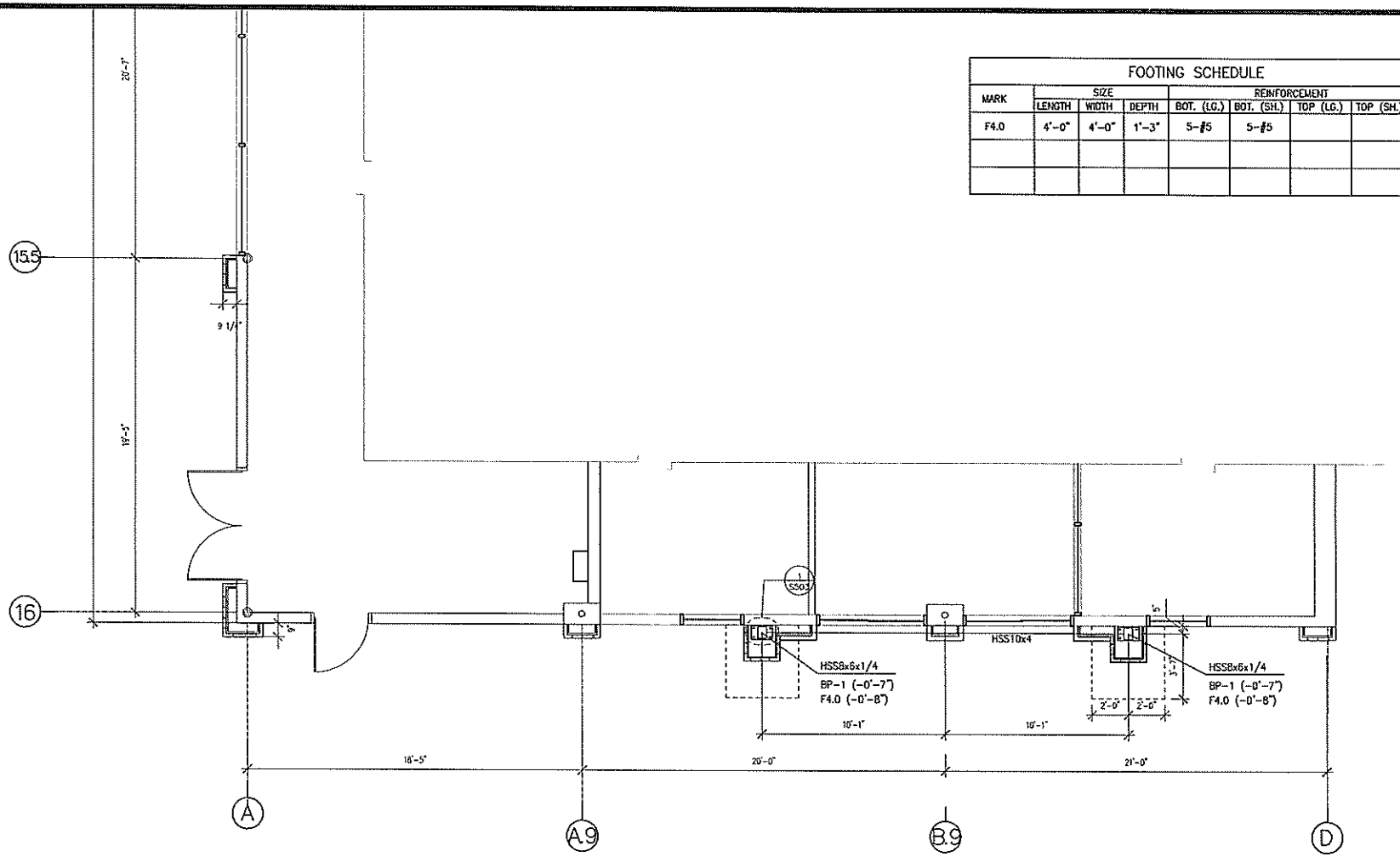

FOUNDATION/SLAB PLAN
SCALE: 3/8" = 1'-0"

N

NOTES:
1. SEE S001 FOR STRUCTURAL STEEL DESIGN NOTES.
2. CONTRACTOR TO VERIFY ALL DIMENSIONS AND SITE CONDITIONS BEFORE STARTING WORK FABRICATION. REPORT ANY DISCREPENCIES TO THE ENGINEER PRIOR TO CONTINUING WORK.
3. REFER TO ARCHITECTURALS FOR COMPLETE DIMENSIONS.

GEORGIA
REGISTERED PROFESSIONAL ENGINEER
12-24
C.H. DAVID TAN

ENGQUEST
3550 ENGINEERING DRIVE, SUITE 175
PEACHTREE CORNERS, GA 30092
TEL: (678) 906-4670
www.engquest.com

JOB NUMBER : 1410074
DRAWN BY : RC
CHECKED BY : DT

YUNG ARCHITECTURE
3483 Satellite Blvd. 310 South
Duluth, Georgia 30096
770-497-0404
Fax 770-497-0035
yungarchitecture@gmail.com

REVISIONS
DATE DESCRIPTION
09/19/14 ISSUE FOR REVIEW
09/24/14 CONSTRUCTION ISSUE
12/04/14 CONSTRUCTION ISSUE

This drawing, as an instrument of service, is and shall remain the property of the Architects and shall not be reproduced, published or used in any way without the permission of the Architect.

MINK'S PACKAGE STORE

2565 DELK RD.
MARIETTA, GA

FOUNDATION/ SLAB PLAN

1410074

S101

DATE : 12/04/2014

FOR CONSTRUCTION.

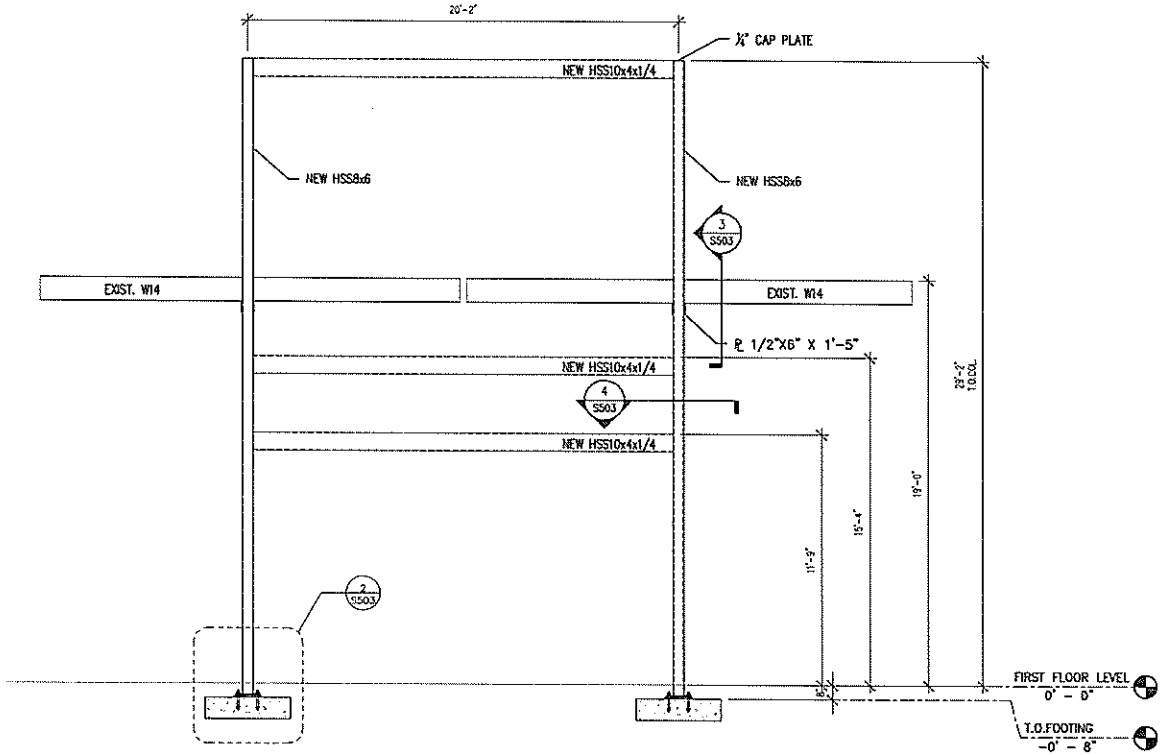

FRAME ELEVATION VIEW
SCALE: 3/8" = 1'-0"

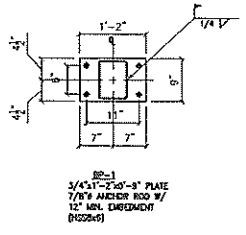

BASE PLATE DETAIL 1
SCALE: 1"=1'-0"

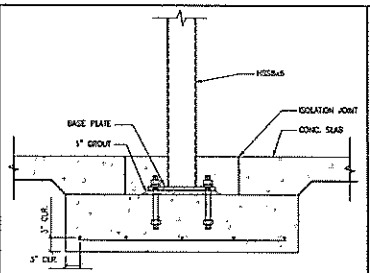

FOOTING 2
SCALE: 1"=1'-0"

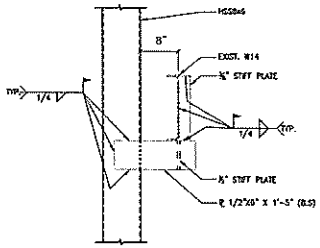

CONNECTION DETAIL 3
SCALE: 1"=1'-0"

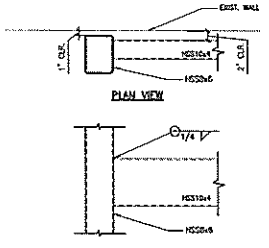

CONNECTION DETAIL 4
SCALE: 1"=1'-0"

GEORGIA REGISTERED PROFESSIONAL ENGINEER C.H. DAVID YAU

ENGQUEST
3550 ENGINEERING DRIVE, SUITE 175
PEACHTREE, CORNERS, GA. 30092
TEL: (678) 906-4670
www.engquest.com

JOB NUMBER : 1410074
DRAWN BY : RC
CHECKED BY : DT

YUNG ARCHITECTURE
3483 Satellite Blvd. 310 South
Duluth, Georgia 30096
770-497-0035
Fax 770-497-0035
yungarchitecture@gmail.com

REVISIONS
DATE DESCRIPTION
09/15/14 ISSUE FOR REVIEW
09/24/14 CONSTRUCTION ISSUE
12/04/14 CONSTRUCTION ISSUE

This drawing, as an instrument of service, is and shall remain the property of the architect whether the project for which it is made is executed or not. It is not to be used in any manner without the written consent of the architect.

MINK'S PACKAGE STORE

2565 DELK RD.
MARIETTA, GA

FOUNDATION/ SLAB PLAN

1410074

S503

DATE : 12/04/2014

FOR CONSTRUCTION