Water and Sanitary Sewer Development Regulations

City of Marietta, Georgia

October 2012

TABLE OF CONTENTS

		Page
SECTION 100 - INTRODUCTION		
101.	General Requirements	100-1
	101.01 Use of This Document	100-1
	101.02 Applicability	100-1
102.	Plan Review Process	100-3
	102.01 Water System	100-3
	102.02 Sanitary Sewer System	100-4
	102.03 Approval by other Government Agencies	100-5
	102.04 General Utility Locations and Installation Requirements	100-5
103.	Construction	100-5
	103.01 Preconstruction Conference	100-5
	103.02 Approved Plans	100-5
	103.03 Notification	100-5
	103.04 Contractor Qualifications	100-6
	103.05 Damage to Water and/or Sewer Facilities	100-6
104.	Inspection	100-6
105.	As-Builts	100-7
106.	One-Year Maintenance	100-8
107.	Building Permits	100-9
SECTION 200 - WATER SYSTEM SPECIFICATIONS		
201.	Preconstruction Requirements	200-1
	201.01 Water Pressure Flow Test	200-1
	201.02 Plan Requirements	200-2
	General Notes for Water System Construction	200-4
	201.03 Contractor Qualifications	200-6
	201.04 Erosion and Sedimentation Control Plan	200-6
	201.05 Easement Acquisition	200-7
	201.06 Construction Permitting	200-8
	Sample Easement Agreement for Water Lines	200-9
	Sample Easement Agreement for Water Meters	200-11

		Page
202.	Design Criteria	200-13
	202.01 General	200-13
	202.02 Water Supply (All Water Supply Systems)	200-13
	202.03 Minimum Water Main Sizes and Fire Hydrant Requirements	200-13
	202.04 Water Main Extension Requirements	200-14
	202.05 Fire Protection	200-14
	202.06 Backflow Prevention	200-15
	202.07 Location of Water Lines and Fixtures	200-15
	202.08 Fire Line Metering Requirements	200-20
	202.09 Water Mains on Private Roads	200-20
203.	Materials	200-20
	203.01 Water Main	200-21
	203.02 Fire Hydrants	200-22
	203.03 Valves and Accessories	200-23
	203.04 General Requirements	200-28
204.	Excavation and Construction	200-29
	204.01 General	200-29
	204.02 Trench Excavation	200-29
	204.03 Backfilling	200-32
	204.04 Laying Pipe	200-33
	204.05 Thrust Restraint for Pressure Lines - Reaction Blocking	200-33
	204.06 Setting Fire Hydrants	200-34
	204.07 Setting Valves and Fittings	200-34
	204.08 Placing of Steel Casing Pipe	200-35
	204.09 Marking Location of Valves	200-35
	204.10 Dewatering Trenches	200-35
	204.11 Bracing, Sheeting, and/or Shoring	200-36
	204.12 Location and Protection of Existing Underground Utilities	200-36
	204.13 Connection to the Existing BLW Water System	200-36
	204.14 Street Cuts	200-37
	204.15 Standard Detailed Drawings	200-38
	204.16 Clean-Up	200-38
	204.17 Interruption of Water Supply During Construction	200-39
	204.18 Barricades	200-39
	204.19 Grassing	200-39

Page

205. Inspection and Tests 200-40

205.01 General 200-40
205.02 Pressure and Leakage Testing 200-40
205.03 Disinfection 200-41

206. Other Requirements 200-43

SECTION 300 - SANITARY SEWER SYSTEM SPECIFICATIONS

301. Preconstruction Requirements 300-1

301.01 Sanitary Sewer Capacity Study 300-1
301.02 Plan Requirements 300-1
General Notes for Sanitary Sewer Construction 300-4
301.03 Contractor Qualifications 300-8
301.04 Erosion and Sedimentation Control Plan 300-8
301.05 Easement Acquisition 300-9
301.06 Construction Permitting 300-10
Sample Easement Agreement for Sanitary Sewer Lines 300-11

302. Design Criteria 300-13

302.01 General 300-13
302.02 Sanitary Sewers Separate from Storm Sewers 300-13
302.03 Non-Domestic Users 300-13
302.04 Sand and Oil/Grease Interceptors 300-13
302.05 Non-Wastewater Connections Prohibited 300-14
302.06 Sanitary Sewers Through Ponds and Lakes 300-14
302.07 Sizing Factors 300-14
302.08 Depth Requirements 300-15
302.09 Slope 300-16
302.10 Increasing Size 300-16
302.11 Ductile Iron Pipe 300-17
302.12 Sanitary Sewer Pipe Material Requirements 300-17
302.13 Subgrade and Pipe Bedding 300-17
302.14 Manholes 300-17
302.15 Protection of Water Supply 300-18
302.16 Service Laterals 300-19
302.17 Provisions for Future Extensions 300-20
302.18 Sanitary Sewer Line Extension Requirements 300-20
302.19 Polyethylene Encasement 300-20
302.20 Easements 300-20
302.21 Aerial Crossings of Creeks and Ravines 300-21

		Page
303.	Materials	300-22
	303.01 Sanitary Sewer Pipe	300-22
	303.02 Casing Pipe	300-24
	303.03 Service Wyes and Bends	300-25
	303.04 Manholes	300-25
	303.05 Concrete and Mortar	300-28
	303.06 Reinforcing Steel	300-28
	303.07 Brick	300-28
	303.08 Subgrade Stabilizer Stone	300-28
	303.09 Polyethylene Tubing For Ductile Iron Pipe	300-29
	303.10 Casing Spacers	300-29
	303.11 Concrete for Thrust Blocks and Thrust Collars	300-29
304.	Excavation and Construction	300-29
	304.01 General	300-29
	304.02 Trench and Manhole Excavation	300-29
	304.03 Installation of Sanitary Sewer	300-32
	304.04 Making of Joints	300-34
	304.05 Subgrade and Pipe Bedding	300-34
	304.06 Dewatering Trenches	300-35
	304.07 Backfilling	300-36
	304.08 Stream Crossings	300-37
	304.09 Casing for Sanitary Sewers	300-38
	304.10 Bracing, Sheeting, and/or Shoring	300-38
	304.11 Location and Protection of Existing Underground Utilities	300-38
	304.12 Connection to the Existing BLW Sanitary Sewer System	300-39
	304.13 Street Cuts	300-39
	304.14 Standard Detailed Drawings	300-40
	304.15 Clean-Up	300-40
	304.16 Barricades	300-41
	304.17 Grassing	300-41
305.	Inspection and Tests	300-42
	305.01 General	300-42
	305.02 Concealed Work	300-42
	305.03 Minimum Tests	300-42
	305.04 Timing of Service Connections	300-46
306.	Pre-Treatment Requirements for Industrial Wastewater	300-46
307.	Other Requirements	300-46

SECTION 400 - STANDARD DETAILED DRAWINGS	STANDARD DETAIL NO.
401. **Water System Details**	
Typical Water Main at Cul-De-Sac	401-01
Typical Fire Hydrant Installation	401-02
3/4" Water Meter Location (For Subdivisions)	401-03
Subdivision Water Meter Location	401-04
3/4" Meter Installation	401-05
1” Residential Meter Installation	401-05.1
1” – 1 ½” Commercial Meter Installation	401-05.2
2” Commercial Meter Installation	401-05.3
Compound Meters and Vault	401-06
Detector / Water Meters and Vault	401-07
Water A & V Release Valve Assembly	401-08
Typical Road Crossing	401-09
Concrete Blocking Detail	401-10
Concrete Thrust Collar	401-11
Concrete Valve Marker	401-12
Blow-Off Assembly	401-13
Water Valve Box Grade Adjustment	401-14
Typical Valve Installation	401-15
402. **Sanitary Sewer System Details**	
Precast Concrete Manhole	402-01
Precast Concrete Doghouse Manhole	402-01A
Standard Vented Manhole	402-02
Shallow Manhole Detail	402-03
Standard Manhole Plans	402-04
Manhole Step	402-05
Standard Manhole Frame & Cover	402-06
Manhole Frame - Grade Adjustment	402-07
Sewer Service Lateral	402-08
Sewer Service Location Detail	402-09
Cleanout Detail	402-10
Concrete Encasement	402-11
Typical Pipe Adapter	402-12
Sewer Pipe Anchor (Slopes 20% or More)	402-13
Pipe Class 'A' Bedding	402-14
Pipe Class 'B' Bedding	402-15
Pipe Class 'C' Bedding	402-16
Minimum P.V.C. Pipe Bedding Detail	402-17
Sewer Casing Spacer Detail	402-18
Dumpster Pad Detail	402-19
Grease Trap	402-20
403. **General Details**	
Typical Street Cut Repair	403-01
Typical Driveway Cut Repair	403-02
Fence and Gate Detail	403-03

Section 100

Introduction

October 2012

SECTION 100
INTRODUCTION

101. GENERAL REQUIREMENTS

101.01 Use of This Document

1) This document is subject to periodic revision to meet changing requirements for materials, fire and safety regulations, environmental regulations, etc. At the beginning of a project, users should verify that they have the latest edition.

2) This document is intended to convey the general design and construction requirements for a typical project within the jurisdiction of the Marietta Board of Lights and Water which will be referred to in this document as Marietta Water. It also lists specific Marietta Water requirements relating to plan review, inspection, testing and acceptance of facilities. It is not intended as a substitute for site-specific engineering and construction techniques. Individual project conditions may require variances from the provisions in this document in which case such variances should be noted in the plans and other data submitted by the project design professional for Marietta Water approval.

3) The Standard Details in Section 400 are complementary to the Regulations written herein. If the developer or designer notes any discrepancies or desires an interpretation of a specification, they should submit their question to Marietta Water in writing for a decision by Marietta Water.

101.02 Applicability

1) The appropriate provisions of these regulations are applicable to the following water system installations:

    a. Any water system for property proposed for commercial, industrial, institutional or residential development (as defined in the ordinances of the City of Marietta and/or Cobb County) which is within the Marietta Water service boundary will be subject to these regulations. All such water systems must be tied to and served from Marietta Water's system. The water main must be installed along both existing and proposed roads rights-of-way to the most distant property line. Under ordinary circumstances the entire cost of water main installation to and within the development will be borne by the

owner/developer. Reimbursement of certain costs of water mains extended to serve the development may be possible in accordance with Marietta Water's Extension Policy outlined in Section 202.04.

b. Privately owned and maintained water systems for developments within the Marietta Water service boundary are subject to these regulations.

2) The appropriate provisions of these regulations are applicable to the following sanitary sewer system installations:

a. Any sanitary sewer system connected to or discharging into the sewer system already owned, maintained or operated by Marietta Water will be subject to these regulations. Sanitary sewers located within public road right-of-ways or accepted Marietta Water sewer easements will become the property of Marietta Water and will be maintained by Marietta Water after the specified developer maintenance period and final acceptance.

b. Any proposed development located within the same drainage basin as an existing sanitary sewer line is required to serve the development with sanitary sewers and to connect to Marietta Water's system. All proposed lots shall be served. Under ordinary circumstances, the entire cost of the sanitary sewer system installation to and within the development will be borne by the owner/developer. Reimbursement of certain costs of trunk sanitary sewers extended to serve the development may be possible in accordance with Marietta Water's Sewer Extension Policy outlined in Section 302.18.

c. All commercial, institutional or industrial developments shall be required to serve the development with sanitary sewers and connect to Marietta Water's sanitary sewer system.

d. Any sanitary sewer system serving a development located within a drainage basin served by Marietta Water shall be designed and installed in accordance with these regulations.

e. Privately owned and maintained sanitary sewer systems for developments within the Marietta Water service boundary are subject to these regulations.

f. Waiver of the above requirements to connect to the sewer system will

be considered on a case by case basis for:

1. Single family subdivisions in which all lots are one-half (½) acre or larger in area and sanitary sewer is considered not-available (nearest connection point to an existing sewer line is greater than 1,000 feet from the lowest property line). .
2. Individual residential, institutional or industrial sites when the nearest connection point to a sewer line is more than 500 feet from a property line, when such developments are to be used for single-family dwellings or other use where the wastewater generation is no more than that of a single-family dwelling (approximately 400 GPD).

Requests for waiver must be accompanied by appropriate documentation as required by local public health officials.

102. PLAN REVIEW PROCESS

102.01 Water System

The following steps apply to the approval for installation of water mains, fire hydrants, valves, and appurtenances by private developers in commercial, industrial, institutional or residential developments:

1) The developer must submit seven (7) copies of construction plans as outlined in these specifications to the City of Marietta Public Works Department for review. These plans must carry the stamp of a registered professional engineer or a registered land surveyor. If the project requires a water line extension of more than 500 feet to reach the project, a registered professional engineer must design and stamp the line extension. The plans submitted must include all land to be developed even if the land is to be developed in several phases or units.

2) Flow and pressure tests will be conducted by Marietta Water or a representative of Marietta Water in the area of the proposed development. These tests shall be paid for by the developer prior to the performance of tests at the rate then in effect as established by Marietta Water. (See Sections 201 and 202.)

3) If approved as submitted, two (2) copies of plans stamped "Approved" will be returned to the developer.

4) If revisions are required, a checklist noting the deficiencies of the plans will be returned to the developer.

5) After the revisions have been made, the developer must submit seven (7) additional copies of revised construction plans to the Public Works Department for review.

6) If all of the required revisions have been properly made, two (2) copies stamped "Approved" will be returned to the developer.

7) Approved plans are only valid for one year from the date of approval.

102.02 Sanitary Sewer System

The following steps apply to the approval for installation of sewer lines, manholes and appurtenances by private developers in commercial, industrial, institutional or residential developments:

1) The developer must submit seven (7) copies of construction plans as outlined in these specifications to the City of Marietta Public Works Department for review. These plans must carry the stamp of a registered professional engineer or a registered land surveyor. If the project requires a sewer line extension of more than 500 feet to reach the project, a registered professional engineer must design and stamp the line extension. The plans submitted must include all land to be developed even if the land is to be developed in several phases or units.

2) If approved as submitted, two (2) copies of plans stamped "Approved" will be returned to the developer.

3) If revisions are required, a checklist noting the deficiencies of the plans will be returned to the developer.

4) After the revisions have been made, the developer must submit seven (7) additional copies of revised construction plans to the Public Works Department for review.

5) If all revisions have been properly made, two (2) copies stamped "Approved" will be returned to the developer.

6) Approved plans are only valid for one year from the date of approval.

102.03 Approval by other Government Agencies

No part of the approval process is intended to relieve the developer of the responsibility to comply with minimum standards of the Georgia Department of Natural Resources, National Resources Conservation Service, United States Corps of Engineers, EPA, EPD, Georgia Department of Transportation, Cobb County, City of Marietta or other appropriate regulatory agency.

102.04 General Utility Locations and Installation Requirements

All utilities within the curbs shall be installed and the ditches backfilled and thoroughly compacted before any pavement or base is installed. All utility manholes and valve boxes shall be brought to finished grade within the roadway section.

103. CONSTRUCTION

103.01 Preconstruction Conference

The developer, design professional, and contractor are required to meet with Marietta Water for the purpose of discussing the construction of the proposed development. The proposed start date and an approximate time for completion will be given to Marietta Water.

The preconstruction conference may be required to be attended before the issuance of the construction permit. No water or sanitary sewer construction shall be allowed until the permit is issued and is displayed at the project site.

103.02 Approved Plans

An approved set of construction plans stamped by Marietta Water must be kept onsite at all times by the Contractor.

103.03 Notification

Marietta Water shall be notified by the developer or his contractor before construction begins, and at the various stages in construction as required by Marietta Water. Marietta Water shall be given a 48 hour advance notice before an inspection is needed.

103.04 Contractor Qualifications

Contractors performing utility construction must be licensed in accordance with State of Georgia law and local ordinances and approved by Marietta Water. They should be completely familiar with the procedures and contract requirements associated with this type of project. Unsatisfactory work will cause a contractor to not be approved for future work. Any and all subcontractors must be approved by Marietta Water.

103.05 Damage to Water and/or Sewer Facilities

The Developer is responsible for replacing any and all water and/or sewer facilities which are damaged by the Developer and any of his Contractors and any Builder working at the project site. Water and sewer facilities include but are not limited to service lines, meters, meter boxes, valves, valve boxes, valve markers, fire hydrants, and manholes. Contractors may not operate or tamper with any valve on a water line owned by Marietta Water. Marietta Water shall be notified of any intent to operate a valve; Valves shall be operated only by Marietta Water personnel or in the presence of Marietta Water personnel.

104. INSPECTION

104.01 Any water or sanitary sewer utility installed as provided for in these Specifications will be subject to inspection during construction by the Public Works Department and/or Marietta Water.

104.02 On any system to be accepted for ownership and operation by Marietta Water, a final inspection will be made to accept or reject the work when completed. Evidence must be submitted to Marietta Water in writing indicating that installation of the water system has been subjected to and has passed hydrostatic and disinfection requirements as set out in these specifications before acceptance. Owner/ Developer must arrange with Marietta Water Inspector a CCTV inspection by Marietta Water personnel. Sanitary sewer installation must passed all testing and inspection requirements as set out in these specifications before acceptance.

104.03 Authorized representatives of Marietta Water, City of Marietta Public Works Department, Cobb County, the EPD, or other state or federal agencies shall have access to the site for inspection at all times.

105. AS-BUILTS

Three sets of as-built drawings must be submitted to Marietta Water immediately after the completion of construction. These as-built drawings shall include:

105.01 The water system as-builts shall show locations of fire hydrants, line valves, tees, bends, service locations, water main sizes and types of materials. (See S.201.02.3.)

105.02. The sanitary sewer system as-builts shall include both plan and profile and shall show locations of manholes, lines, services, line sizes, types of materials, manhole invert elevations, rim elevations, and line grades. Elevations shall be based on mean sea level. (See S.301.02.3.)

105.03 The as-built plans shall be clear and legible. They shall be drawn to a scale which will permit all necessary information to be plainly shown. As-Built Plans shall be submitted on 22" x 34" drawing sheets and shall be submitted concurrently in an "Autocad" drawing electronic format. A sheet index shall be provided, as well as a legend of symbols used. Horizontal locations shall be referenced to Georgia State Plane Coordinates (West Zone feet). Vertical locations shall be shown referenced to Mean Sea Level. Reference all horizontal locations to the NAD83 (latest adjustment) datum and reference all vertical locations to the NAVD88 datum. All orthometric locations shall be referenced to Geoid 99. All points are subject to verification by the Marietta Board of Lights and Water.

Water line locations shall be shown on plans and submitted in ASCII text electronic format for each point. Points on the water main identified shall include all line taps, connections to existing mains, bends, tees, valves, fire hydrants, water meters, and fire line meters, and shall include:

a. Point ID Number
b. Northing
c. Easting
d. Ground Elevation
e. Elevation of Valve Operating Nut, Hydrant Nut, or Meter Box
   (Note: Elevations of the pipe at tees, bends and connections are not required.)
f. Point Description (Hydrant, Valve Type and Size, Meter, etc.)

Sewer line locations shall be shown on plans and submitted in ASCII text electronic format for each point. Points along the gravity sanitary sewer line shall include all manholes, and shall include:

a. Manhole ID Number
b. Northing
c. Easting
d. Center of Manhole (Lid) Elevation
e. Invert (In and Out) Elevations
f. Each Manhole point shall include pipe(s) entering and leaving manhole. Pipe(s) size, Pipe Invert, Material, Type (i.e. Sewer line, service line or force main).
g. Lateral Tap Locations
h. Service Clean-Out Locations

105.04. A completed line extension and subdivision data sheet (blank copy provided by Marietta Water as shown at the end of Section 100 - Exhibit A) describing the water and sewer improvements shall be given to Marietta Water with the as-built drawings.

105.04 Marietta Water shall have the right to withhold water/sewer tap permits until the as-builts have been submitted as required.

105.05 The conditional approval letter will not be issued until as-builts have been completed and submitted to Marietta Water.

105.06 Hand-marked copies prepared by the Contractor will not be acceptable. The copies must be sharp, clear, clean and legible and must be suitable for filming for permanent records.

106. <u>ONE-YEAR MAINTENANCE:</u>

106.01. The developer shall maintain the improvements in his development for a period of one year from the date Marietta Water issues written conditional approval of the improvements. Ninety days before the end of the maintenance period, Marietta Water shall perform an inspection of the development. The developer shall be notified of the inspection results in writing including a list of deficiencies for immediate correction.

106.02. If repairs are needed for the development to meet Marietta Water specifications, the developer shall be required to make such repairs within 60

days, after written notification by Marietta Water. Should any developer/contractor fail to comply with the specifications and regulations of Marietta Water or fail to correct deficiencies identified by Marietta Water, a hold may be placed on any remaining meters or sewer taps or, when appropriate, approval will not be given on any future proposals by the developer/contractor until all previous projects of the developer are in compliance with these regulations. Additional maintenance performed by Marietta Water on non-compliant systems shall be billed to the owner/developer.

106.03. If the work is free from defects, or after the required repairs have been completed to the satisfaction of Marietta Water, a letter of final acceptance will be issued to the Developer. The letter will state that the one year maintenance period has expired and that Marietta Water is now the owner of the water and sewer facilities and is responsible for all future maintenance of these facilities.

107. BUILDING PERMITS

Water connection fees, sewer tap fees and system development fees must be paid to Marietta Water prior to the issuance of a building permit. Replacement of water and/or sewer facilities damaged by Builders shall be the responsibility of the Developer.

Section 200

Water System Specifications

October 2012

SECTION 200
WATER SYSTEM SPECIFICATIONS

201. PRECONSTRUCTION REQUIREMENTS

201.01 Water Pressure Flow Test

1) A water pressure flow test must be run on any existing water line to determine the adequacy of water supply for the project. The test shall consist of fire hydrant flow test and a twenty-four (24) hour pressure test. (See Section 102.01.2) The tests shall be run by Marietta Water or a representative of Marietta Water.

   Test information shall consist of:

   A) Static Pressure and Elevation of Static Gauge
   B) Recorded Flow in GPM and Residual Pressure
   C) Maximum Elevation in Development
   D) Available Flow at Maximum Elevation with 20 PSI Residual Pressure
   E) Twenty-four (24) hour pressure chart

   An adequate supply of water for the proposed project must be available prior to the approval of any plans unless an exception is granted by Marietta Water. The results of any flow test are valid for six months.

2) All projects which have flow test / pressure chart test results showing static pressures of less than 35 PSI or a residual pressure of less than 20 PSI will require a special design study to be completed and submitted to Marietta Water for approval to insure that no problems are to be encountered during peak demand periods. This study must be approved by Marietta Water before any construction plans will be approved.

3) If the fire flow test indicates an insufficient available flow (See Section 202.05), a second test may be conducted following a search by Marietta Water for closed valves, partially closed valves, or other restrictions. If, once these valves have been opened and restrictions removed, the second test also fails, the developer shall provide Marietta Water with a detailed special design study by a Georgia Registered Professional Engineer which outlines the water system improvements necessary to achieve the required minimum available flow.

Marietta Water will review the proposed solutions for all developments where the existing water supply fails to provide the required minimum available flow for the proposed development on a case by case basis.

4) Proposed developments located above an elevation of 1150 feet M.S.L. which are not located within a high service boundary may be subject to the proceeding stipulations. The Developer may provide Marietta Water with a detailed special design study completed by a Georgia Registered Professional Engineer which outlines the water system improvements necessary to achieve the required minimum available flow. If approved by Marietta Water, all costs for required improvements will be borne by the owner/developer.

   Developments proposed within a high service boundary and located above 1220 feet M.S.L. shall NOT be approved.

201.02 Plan Requirements

1) Construction Plans shall consist of the following:

   A) Site plan showing the water layout only with project name, streets, street names, storm drains, topography with contour lines at two foot intervals, location map, lot layout (if subdivision) or building location (multi-family, commercial or industrial site), land lots, district and north arrow. Note if any other utilities are existing. Plan scale shall be a minimum of 1"=100'. Sheet size shall be 22" x 34".
   B) Proposed pipe sizes and service stub-out locations.
   C) Location and size of water valves, and air release valves (to be installed at highest points of system).
   D) Thrust blocks where used.
   E) Fire hydrant locations.
   F) Water system materials.
   G) Location and sizes of existing water lines surrounding project, with nearest line valve in each direction from proposed connection, and nearest fire hydrant locations.
   H) Detail of connection to existing lines.
   I) Show location of power lines, poles, and transformer pedestals to assure no conflicts with water meters.
   J) Proposed meter sizes and locations. Show adequate, clear, and level space for meter and vault installation.
   K) Detailed plan of fire line meters, detector meters, compound meters, backflow preventers, etc. if applicable.
   L) Any other items incidental to the proposed system.

M) Details of special water line installations such as stream crossings, elevated lines on piers, bridges, pipe bedding, special highway crossings, railroad crossings, etc.

N) Plan and profile sheets shall be prepared with a horizontal scale of 1"=50' and a vertical scale of 1"=10'. These scales also apply to any profile view of sewers.

O) Each set of construction plans shall include a reproduction of the standard Utilities Protection Center "Call Before You Dig" symbol.

P) The Soil and Erosion Control plan must be shown in relation to the proposed water system. (See Section 201.04)

Q) Letter documenting that none of the water / sewer main lines and service lines, and the structures to be connected to these services, are being located in or in close proximity of an abandoned landfill site, or any other site used for waste disposal.

R) The General Notes for Water System Construction shown on the following page shall be included in each set of plans.

BOARD OF LIGHTS AND WATER
WATER SYSTEM CONSTRUCTION
GENERAL NOTES

1. All water system construction must follow the current Marietta Water system specifications. Contractor is responsible for obtaining and abiding by the current Marietta Water System Specifications.

2. Class 51 Ductile Iron Pipe (D.I.P.), in accordance with the Marietta Water System Specifications, is required for all water mains.

3. All line valves shall be marked by concrete valve markers.

4. A concrete valve marker is to be placed directly above the plug on all dead-end water mains.

5. Information regarding underground utilities on these plans is not guaranteed as to accuracy or completeness. Prior to beginning work, the Contractor shall request a field location through the utilities protection center and any utility owners thought to have facilities in the area. The Contractor shall promptly compare these field-marked locations with the project plans and then notify the Designer of any anticipated problems or need for contract changes. It is the Contractor's responsibility to excavate or cause the utility owner to excavate for the purpose of determining exact elevations or locations at utility crossings and other critical locations well in advance of the work under this contract. Damage to existing utilities resulting from the Contractor's negligence shall be repaired at the Contractor's expense. The Developer and/or the Developer's Contractor is responsible for verifying the exact location, size, and material of any existing water or sanitary sewer facility proposed for connection or use by this project.

6. All water service lines under pavement shall be encased in PVC casing with a minimum diameter of 2", extending a minimum of 3 feet beyond the pavement on each side of the road.

7. All bends, tees, and plugs shall be properly constrained for thrust restraint.

8. The developer shall obtain a permit from the City of Marietta Public Works Department or Cobb County and notify the Marietta Water Inspector 48 hours before beginning construction. (770-794-5253)

9. The developer shall install water services up to and including meter boxes and curb stops. Meters will be set by Marietta Water after the building permit is issued.

10. Water mains shall be installed with a minimum of 48" cover (Section 202.07)

Effective 10/2012

11. Water meters, double-check backflow preventers and detector check valves with bypass detector check meters will be installed by Marietta Water. Developer must pay all fees before meters will be set.

12. Flow Test Information:
    Static Pressure: _____ psi at _____ ft.
    Recorded Flow: _____ GPM with _____ psi residual pressure.
    Maximum Elevation in Development _____ m.s.l. (to be determined by developer.)
    Flow Available at Max. Elevation: _____ GPM with 20 psi residual pressure.
    Size of water main at point of connection to project: _____ inches
    Date of flow test: _____

2) The approved water plan shall not be changed except by written approval of Marietta Water.

3) As-Built Drawings:

   a. As-Built drawings will be the same format as the original construction plans.
   b. Road names and lot numbers should be on plans.
   c. "Record Drawings" is to be stamped in large clear print on plans.
   d. Sheet size shall be 22" x 34".
   e. Mains including size and type of meter should be shown.
   f. Service and meter locations shall be shown.
   g. Fire hydrants, gate valves, and air release valves should be shown and tied
      down with distances from permanent objects adjacent to water system.
   h. Plan of fire meters or detector meters should be shown if applicable.
   i. See Section 105 regarding the state plane coordinate requirements for as-builts.

201.03 Contractor Qualifications

Contractors performing water line installations must be licensed in accordance with State of Georgia law and local ordinances and approved by Marietta Water. They should be completely familiar with the procedures and contract requirements associated with this type project. Unsatisfactory work will cause a contractor not to be approved for future work. Any and all subcontractors must be approved by Marietta Water.

201.04 Erosion And Sedimentation Control Plan

A. The Georgia Soil and Water Conservation Commission has taken provisions of ACT 599 and published a **MANUAL FOR EROSION AND SEDIMENT CONTROL IN GEORGIA**, 2000 Edition (or any more current edition as they are published). Water construction plans and specifications shall include appropriate segments of this manual. Developers, Engineers, Design Professionals and Contractors performing work within the Marietta Water service boundary are responsible for acquiring a copy of this manual and using the best management practices contained therein to control the erosion and sedimentation of the construction site in conformance with the intent of ACT 599. Copies may be purchased from the Georgia Soil And Water Conservation Commission, P.O. Box 8024, Athens, Georgia 30603. For additional information, call the Commission at 706-542-3065.

B. Plan: An erosion and sediment control plan, meeting the requirements of applicable state regulations, shall be provided as part of the overall construction drawings.

C. Erosion Control Details: Erosion Control Details and Symbols may be taken directly from the **Manual For Erosion and Sediment Control In Georgia**, as referenced above.

201.05 Easement Acquisition

A. It shall be the responsibility of the developer to obtain any off-site easements required to connect the project to the existing water system. Easements will be conveyed to the Marietta Water for all facilities which are to be conveyed to the Marietta Water. This process must be started early enough to allow construction of the water mains before any building construction is to begin. No building permits, water meter or sewer tap applications shall be issued until off-site water mains and sewers have been constructed and accepted. A sample water main easement agreement is included at the end of Section 201.

B. All easements shall allow adequate room to construct the water main and appurtenances. Permanent easements shall be a minimum of 20 feet wide, 10 feet on each side of the line.

C. All easements for water meters shall allow adequate clear and level space to install all required meters, boxes and/or vaults. Required easement areas are as follows:

3" – 8" DDC only	15'x 15'
3" –8" Meter only	15'x 25'
3" –8" DDC with ¾-inch through 2-inch Meter	15'x 15'
3"-8" FM Meter	20'x 25'

A sample meter easement is included at the end of Section 201.

D . Easement drawings for water meters and for work outside the development shall be provided prior to the approval of the water system plans. The drawings shall be of a size suitable for legal recording and shall be prepared by a Registered Land Surveyor. The drawing will show property lines, the name of property owners with the length of line encroaching on each property owner, size of line, width of permanent and construction easement, scale of drawing, north arrow, land lot and district numbers, and a tie to the nearest land lot corner. Any streets or other existing easements shall also be shown. Easement agreements referencing these drawings shall be prepared and

attached to the drawings, signed by the property owners, submitted to and approved by Marietta Water, and then recorded at the Cobb County Clerk of Superior Court's office. A copy of the recorded easement agreement shall be provided to Marietta Water prior to the construction of off-site facilities.

The title block shall be shown as follows:

Marietta Board of Lights and Water
NAME OF OUTFALL OR SUBDIVISION
EASEMENT FOR PROPOSED
WATER MAIN
CROSSING PROPERTY OF
John Doe

LL: District: Section: Date: Revised Date:

201.06 Construction Permitting

The preparation and cost of all required permit applications shall be the responsibility of the Developer. Permit applications shall be submitted to Marietta Water and the Marietta Water will submit the applications to the governing authority. Required permits may include but are not limited to USACOE Wetlands Permits, EPD. EPA, D.O.T. Utility Encroachment Permits, Cobb D.O.T., NRCS (Soil and Erosion Control), Railroad Crossing Permits, Utility Crossings, etc.

Construction permits will not be issued until the utility encroachment permit has been obtained and until any special conditions such as insurance requirements have been complied with.

State of Georgia
County of Cobb

Grant of Easement
Water

This Easement Agreement is made and entered into this _____ day of _____ 20____, by and between _____
Of the aforementioned State and County as party of the first part, hereinafter referred to as "Grantor," and Marietta Board of Lights and Water, a political subdivision of the State of Georgia, as a party of the second part hereinafter referred to as "Grantee":

W I T N E S S E T H

That Grantor for in consideration of the sum of ONE & 0/100 dollar(s) ($ 1.00) and other good and valuable consideration the receipt and sufficiency of which are hereby acknowledged, does hereby grant, bargain, sell, and convey unto Grantee, a perpetual water easement over and under Grantor's property being more particular described as follows:

> All that tract or parcel of land lying and being in Land Lot _____ of the _____ District, 2nd Section of Cobb County, Georgia, and being a strip of land more particularly described on the attached plat shown as Exhibit "A".

The actual water easement area may differ from the description shown on Exhibit "A." The actual water easement shall be a strip of land _____ feet wide, being _____ feet on either side of the water line as actually installed, together with a construction / installation easement up to _____ feet in width, as shown on the attached plat Exhibit "A".

The water easement conveyed herein by Grantor is for the purpose of a water line and includes the rights to enter upon Grantor's property to install, inspect, maintain, replace, or repair the same, as may from time to time be necessary, or whenever Grantee deems fit, with all rights, members and appurtenances to said easement and right-of-way in anywise appertaining or belonging thereto.

Grantor for both itself and its heirs and assigns understands and agrees in connection with this conveyance that any and all construction, digging, grubbing, clearing, filling, or other earth moving or construction activities within or in the easement area conveyed herein are specifically in violation of the rights conveyed herein and are, therefore, prohibited without written permission from the Marietta Board of Lights and Water.

Grantor hereby covenants with Grantee that it is lawfully seized and possessed of the real estate previously described herein and that it has good and lawful right to convey the easement covered by this document, or any part thereof, and that the said easement is free from all encumbrances. The easement herein granted shall bind the herein granted shall bind the heirs and assigns of Grantor and shall inure to the benefit of the successors in title of Grantee.

Additional Stipulations:

IN WITNESS WHEREOF, Grantor has hereunto set its hand and seal the day and year above first written.

_____	_____
Witness (printed name)	Grantor (printed name)
_____	_____SEAL
(Signature)	(Signature)
	_____
	Grantor (Printed Name)
	_____SEAL
	(Signature)
Sworn to and subscribed before me	_____
this the___ day of _____ 20 _____.	Grantee: Board Manager
_____ (SEAL)	
Notary Public	

Return To:
Marietta Water
627 B. North Marietta Parkway
Marietta, GA 30060
Attn: Kim Holland

****Attach an 8 ½" x 11" Plat – Exhibit "A".****

Effective 10/2012

State of Georgia
County of Cobb

Grant of Easement
Water Meter

This Easement Agreement is made and entered into this _____ day of _____ 20____, by and between _____
Of the aforementioned State and County as party of the first part, hereinafter referred to as "Grantor," and Marietta Board of Lights and Water, a political subdivision of the State of Georgia, as a party of the second part hereinafter referred to as "Grantee":

W I T N E S S E T H

That Grantor for in consideration of the sum of ONE & 0/100 dollar(s) ($ 1.00) and other good and valuable consideration the receipt and sufficiency of which are hereby acknowledged, does hereby grant, bargain, sell, and convey unto Grantee, a perpetual water meter easement over and under Grantor's property being more particular described as follows:

> All that tract or parcel of land lying and being in Land Lot _____ of the _____ District, 2nd Section of Cobb County, Georgia, and being a strip of land more particularly described on the attached plat shown as Exhibit "A".

The actual meter easement area may differ from the description shown on Exhibit "A." The actual meter easement shall be a _____ foot wide by _____ foot long square area surrounding the _____ meter as actually installed, the _____ meter being the center of said area.

The water meter easement conveyed herein by Grantor is for the purpose of a water meter and includes the rights to enter upon Grantor's property to install the water meter to be situated within the said easement, and to inspect, maintain, replace, or repair the same, as may from time to time be necessary, or whenever Grantee deems fit, with all rights, members and appurtenances to said easement and right-of-way in anywise appertaining or belonging thereto.

Grantor for both itself and its heirs and assigns understands and agrees in connection with this conveyance that any and all construction, digging, grubbing, clearing, filling, or other earth moving or construction activities within or in the easement area conveyed herein are prohibited without written permission from the Marietta Board of Lights and Water.

Grantor hereby covenants with Grantee that it is lawfully seized and possessed of the real estate previously described herein and that it has good and lawful right to convey the easement covered by this document, or any part thereof, and that the said easement is free from all encumbrances. The easement herein granted shall bind the herein granted shall bind the heirs and assigns of

Grantor and shall inure to the benefit of the successors in title of Grantee.

Additional Stipulations:

IN WITNESS WHEREOF, Grantor has hereunto set its hand and seal the day and year above first written.

_____	_____
Witness (printed name)	Grantor (printed name)
_____	_____SEAL
(Signature)	(Signature)
	_____
	Grantor (Printed Name)
	_____SEAL
	(Signature)

Sworn to and subscribed before me
this the___ day of _____ 20 _____.

_____ (SEAL)
Notary Public

_____
Grantee: Board Manager

Return To:
Marietta Water
627 B. North Marietta Parkway
Marietta, GA 30060
Attn: Kim Holland

****Attach an 8 ½" x 11" Plat – Exhibit "A".****

Effective 10/2012

202. DESIGN CRITERIA

202.01 General

The criteria listed herein is not intended to cover all aspects of design, but rather to mention the basic guidelines and those particulars that are required by Marietta Water.

202.02 Water Supply (All Water Supply Systems)

Single-family and two-family residential water supply for domestic use shall be in accordance with the following table plus 1000 gpm and provide a minimum pressure of twenty psi:

INSTANTANEOUS WATER DEMANDS FOR RESIDENTIAL AREAS

TOTAL NUMBER OF RESIDENTIAL UNITS SERVED	GPM PER RESIDENTIAL UNIT	TOTAL NUMBER OF RESIDENTIAL UNITS SERVED	GPM PER RESIDENTIAL UNIT
5	8.0	90	2.1
10	5.0	100	2.0
20	4.3	150	1.6
30	3.8	200	1.3
40	3.4	300	1.2
50	3.0	400	0.9
60	2.7	500	0.8
70	2.5	750	0.7
80	2.2	1,000	0.6

The minimum water supply for other than single-family and two-family residential developments shall be 1000 gpm with a minimum residual pressure of 20 psi. The Fire Marshall shall determine additional flow requirements for such developments.

202.03 Minimum Water Main Sizes and Fire Hydrant Requirements

1) **Any system, whether served from an existing Marietta Water main or otherwise, shall have a minimum size of 8-inch pipe installed. Actual sizes may be larger depending on the size required to meet the demand of the proposed development. Six (6) inch pipe is allowed for use in cul-de-sacs, in accordance with Section 202.05.6f.**

2) Where a water main extension from an existing Marietta Water main is required along an existing public right-of-way or future supply route, the size of pipe to be used will be either 8" or the size required to meet the demand of the development, whichever is largest. Marietta Water may require a larger pipe size to be installed than is required by this standard, and the cost of this oversizing may be funded by Marietta Water, in accordance with the Line Extension Policy (Section 202.04).

3) Fire hydrants will be required as set forth in these specifications where a proposed system is to be served from an existing Marietta water main or in any case where Marietta Water is to accept a new system for ownership and operation. The Fire Marshall may also require additional fire hydrants where deemed necessary.

202.04 Water Main Extension Requirements

1) Developers are required to extend or upgrade existing water mains as needed to serve their property. The size of the main will be set in accordance with Section 202.03.

2) Developers are required to extend all mains along their entire property frontage if the existing main is adjacent to the proposed development. The size of the main will be set in accordance with Section 202.03.

3) In certain circumstances, Marietta Water may require a larger pipe size to be installed than is required by these standards, and the cost of this oversizing may be funded by Marietta Water. The developer may be required to pay all of the initial costs. Any Marietta funding will require Board approval.

202.05 Fire Protection

1) Minimum flows in GPM with 20 psi residual pressure shall be in accordance with Section 202.02.

   Marietta Water may require provision of required flows prior to development of property.

2) All plans for development must meet all applicable fire protection codes.

3) All requirements for design criteria and material and construction specifications must be met to secure a permit from the Department of Natural Resources for construction.

4) Spacing of fire hydrants where required shall be as follows:

   a. All residential and commercial developments shall have fire hydrant spacing no farther than 500 feet.
   b. Fire hydrants shall normally be located at all intersections.
   c. Fire hydrants shall be required at the end of all dead-end lines such as those installed in cul-de-sacs.
   d. No installation requiring fire hydrants shall have a spacing greater than 500 feet apart as measured along the main supply line.

5) Fire Main Size

   a. Multi-Family: Water mains to be no less than 8" in diameter.
   b. Shopping Centers, Malls, etc.: Water mains to be no less than 8" in diameter.
   c. Commercial Areas With Less Than 200,000 Sq. Ft.: Water mains to be no less than 8" in diameter.
   d. Motels, Light Industry & Schools: Water mains to be no less than 8" diameter.
   e. Commercial areas with 200,000 sq.ft. or more, Heavy Industry, Large/Tall Buildings: Water mains to be no less than 12" in diameter.
   f. Single Family: Single family residential developments shall use a minimum of 8 inch water mains, except in cul-de-sacs where 6" mains are acceptable. With regards to the sizing of water mains, cul-de-sacs are hereby defined as dead end streets no longer than 500' in length. Larger size mains may be required in accordance with demand.

6) Water mains and fire hydrants, under water pressure and ready for fire fighting, shall be installed by the developer and approved by Marietta Water before any construction framing may be installed.

202.06 <u>Backflow Prevention</u>

1) All water meters shall be provided with a backflow preventer.

2) Fire lines shall be provided with a detector meter or a factory mutual fire meter, in accordance with the Fire Line Requirements outlined in Section 202.08. Fire line meters and detector meters shall be designed to meet site-specific conditions and shall be provided with double check valve backflow preventers. See the Standard Detailed Drawings for conceptual layouts.

3) Reduced pressure zone backflow preventers with relief vents are required for high risk situations as determined by Marietta Water. All reduced pressure zone backflow preventers shall be installed in vaults set above the ground

with drains. Reduced pressure zone backflow preventers shall be installed by the Developer.

4) The type of backflow preventer required for each of the situations listed above is described in Section 203.03.7.

202.07 Location of Water Lines and Fixtures

1) Existing Roads

On existing roads, water mains shall be located five feet from the edge of the right-of-way whenever possible. Water main shall be installed so that the top of the pipe is a minimum of 48" below grade, 48" below the edge of pavement, or 36" below the drainage ditch paralleling the road, whichever is deepest. Permission must be granted by Marietta Water to vary from this requirement. Fire hydrants on existing roads shall be located as near to the right-of-way as practical or as required by the Georgia Department of Transportation.

2) New Streets

Water mains on new streets shall be located five feet from the edge of the right-of-way whenever possible. Water main shall be installed so that the top of the pipe is a minimum of 48" below grade, 48" below the edge of pavement, or 36" below the drainage ditch paralleling the road, whichever is deepest. Permission must be granted by Marietta Water to vary from this requirement. Fire hydrants on new streets shall be located as near to the right-of-way as practical or as required by the Georgia Department of Transportation. **The construction of the water main shall not begin until the rough grading is completed and all curbing is installed.**

3) Service Laterals

Service laterals shall be located with a minimum bury equal to that of the main line within the right-of-way and shallowing to a bury of 18 inches at the water meter location. Minimum service line size shall be 1". Contractor to install appropriate size corporation stop at the main, service laterals and curb stops in meter boxes.

Any portion of service lateral located under pavement shall be encased in P.V.C. pipe, extending a minimum of 3' beyond the edge of pavement on both sides of the road. Copper tubing shall be used for all services. Flare joints shall be used, (compression joints with restraint nut allowed on 2"

services). Splices of copper tubing are not allowed under any roadway pavement. A "W" shall be sawed into the curb where each service tap is made for permanent location. Direct taps are required for 1" service taps. Service saddles are required for taps larger than 1" in diameter.

4) Water Meters and Boxes

Water meters smaller than 3" will be furnished and installed by Marietta Water in boxes located at the edge of the street right-of-way. Water meters 3" and larger will be furnished and installed by Marietta Water and set in vaults. The developer is to clearly mark the lot number inside of each meter box. No meters will be set until all meter fees are paid and a building permit issued for the lot requesting service. Services shall be sized and located as shown in the Standard Detailed Drawings. Water meters shall not be set on the same property corner as the power pole / transformer pad.

All Marietta owned water meters shall be installed at an easily accessible location on or near the property line of the premises being served adjacent to the public right-of-way. (Water Meter Easements may be required per Marietta Water Development Regulations.)

Easements shall be provided for meters on all commercial properties (See Section 201.05). No temporary or permanent structures may be placed on or over meter vaults or boxes, or within the meter easement. Any such structures shall be removed at the owner's expense.

All individual lots or buildings which have frontage along public right-of-way shall have an individual, Marietta owned, water meter installed. Private sub-meters may be installed behind the Marietta Water meter as required by State law. An integrated complex of buildings must be served by one Marietta Water owned master meter. , Private sub-meters may be set within the complex behind the master meter as required by State law. Individual Marietta Water owned meters are allowed for Duplexes which have public right-of-way frontage. However, each unit in the Duplex must have a separate sanitary sewer service and tap.

5) Water Valves

Valves 16" and smaller shall be gate valves. Valves larger than 16" shall be butterfly valves.

Water valves at intersections shall be located behind the curb or edge of pavement. As a general rule, the number of valves shall equal the number of streets in the intersection minus one. Marietta Water may require valves in

excess of this requirement if the water system layout warrants additional valves.

The maximum spacing of line valves shall be 1000 feet. Marietta Water may allow greater spacing in low-density rural areas, and may require closer spacing in high-density urban areas and subdivisions. Generally, Marietta Water will require a main line valve at every other fire hydrant as a minimum. The required spacing shall be at the discretion of Marietta Water based on individual development circumstances. Unless at an intersection, line valves shall be located at fire hydrants. Concrete valve markers are required at all line valves and at the end of every dead-end line.

All valves shall be provided with valve boxes. Each valve box shall have a concrete collar. These collars must be a minimum of 3 1/2" thick. They may be round (24" diameter min.) or square (24" x 24"). Precast collars may be used, provided that they are grouted in place to the valve box. The collar is to be flush with or a maximum of 1" above the finished grade. The edge of the valve box is to be 1/2" above the edge of the concrete collar. If settlement occurs, the collar will be reset or repoured.

6) Gate Valves and Line Plug

A gate valve and a minimum of 36 feet of ductile iron pipe shall be provided at the end of all lines for phased developments, and at locations where the water main may be extended in the future for water system improvements. The end of the line shall be provided with a M.J. plug and thrust collar. A 1" tap for chlorination / dechlorination purposes shall be provided. A valve marker will be placed directly above the plug.

7) Dead End Line

At any dead end line, install a joint of D.I. Pipe, a fire hydrant, a M.J. plug, and thrust restraint. (See Section 204.05)

8) Ductile Iron Pipe

Class 51 ductile iron pipe shall be required for all water mains. See materials specifications in Section 203.01.

9) Air and Vacuum Relief Valve Assemblies

A&V assemblies shall be located where appropriate as determined by the design professional responsible for the water system design. All A&V assembly locations are subject to the approval of Marietta Water. Within

subdivisions A&V assemblies are not usually necessary as long as services are located at the water main high points. Concrete valve markers are required at each A&V assembly.

10) Polyethylene Encasement

Where crossing a Gas Company easement or right-of-way, the water main shall be encased in black polyethylene tubing from beginning to end of the easement or R/W. Otherwise, the water main shall be encased in accordance with the Ductile Iron Pipe Research Association's (DIPRA) recommendations. The Developer shall submit a report prepared by DIPRA, detailing their recommendations regarding the pipe, cathodic protection, and polyethylene encasement, to Marietta Water for review.

11) Easements

Water mains that are located outside of the right-of-way (R/W) shall have a 20 foot wide permanent easement. No permanent structures shall be constructed within a permanent easement and access to the easement shall be provided to a public R/W.

12) Acceleration / Deceleration Lanes

Where applicable, if an acceleration lane or a deceleration lane is to be constructed and will cover or encroach over existing water mains, it is the Developer's responsibility to relocate the existing main out from under the proposed pavement.

13) Joint Restraint Inside Casing

Inside of casings, the D.I.P. water main joints shall be slip joint restrained by using American "Fast-Grip" gaskets or approved equal. The water main shall be set on spacers inside the casing. (See Section 203.03.17)

14) Separation between Water Main and Sanitary Sewer

A horizontal separation of at least 10 feet is required between water mains and existing or proposed sanitary sewer mains (measured edge to edge). Where water mains cross existing or proposed sewer lines, 18" vertical separation is required between the two mains (measured edge to edge).

202.08 Fire Line Metering Requirements

1) Persons making applications for new fire service connections with private fire hydrants, hand hose connections, or sprinkler heads will be required to have an underwriter approved detector meter or a factory mutual fire line meter installed as a part of the fire service system. If the normal usage of the development is such that a meter smaller than 6" can be used to serve the development, the Developer will be allowed to use a smaller meter for the normal usage and a detector meter assembly on the fire line.

2) When unauthorized water is used through a detector meter in three or more months in a 12 month period, it shall be replaced with a factory mutual fire line meter. Unauthorized use of water is defined as non-fire fighting water and/or water use without prior notification and approval of Marietta Water. The water that is measured by the detector meter will be billed at five times the normal water charge.

3) All domestic water supply must be metered with a Marietta Water meter.

4) Installation of detector meters or factory mutual fire line meters as required will be provided by Marietta Water. All meter fees must be paid by the Developer before meters will be set.

5) Marietta Water shall have the right to cut off water service to buildings whose owners refuse to comply with these provisions upon proper notification of thirty (30) days.

202.09 Water Mains on Private Roads

Marietta Water will not accept for ownership water mains that are not installed along public right-of-ways or accepted utility easements.

203. MATERIALS

All materials used in the work including equipment shall be new and unused materials of a reputable U.S. Manufacturer conforming to the applicable requirements of the Specifications, and no materials shall be used in the work until they have been approved by Marietta Water. Any reference to an AWWA, ANSI or other such specification shall mean the latest revision published.

203.01 Water Main

1) Ductile Iron Pipe

Thickness Class 51 Ductile Iron Pipe shall be required for all water mains. Pipe shall conform to AWWA C151, latest revision. Joints shall be push-on joints, conforming to AWWA C111, latest revision. Pipe shall be in 18' to 20' nominal lengths with standard deflection pipe sockets. Pipe shall be manufactured by American Cast Iron Pipe Company, United States Pipe and Foundry Company, Griffin Pipe, or equal. Where restrained joints are shown or specified for pipe larger than 12" in diameter, the joints shall be "Lok-Fast" or "Lok-Ring" as manufactured by American Pipe or approved equal.

Ductile iron pipe shall have an outside bitumastic coating per AWWA C151 and shall have an inside standard cement lining with bituminous seal coat per AWWA C104.

Pipe shall be lined with standard cement mortar lining at the point of manufacture, in accordance with AWWA C104, with the following modifications. Cement mortar shall be composed of 100% Portland cement Type II and Type V, sand and water. Cement-mortar lined pipe shall have smooth dense interior surfaces and shall be free from fractures, excessive interior surface crazing, disbondment and roughness. .

Where river crossing pipe is required, the pipe shall be "Flex-Lok Boltless Ball Joint Pipe" as manufactured by American Pipe or approved equal. Where specified, flanged pipe shall meet AWWA C151 specifications and be used with fittings meeting AWWA C110 or AWWA C153.

2) Copper Tubing For Services

House water service pipe shall be copper service pipe, type K, soft temper, seamless copper tubing, conforming to ASTM B-88. Flare joints shall be used for ¾" and 1" services. Compression joints shall be used on 2" services, including stainless steel clamp screws. Couplings shall be Ford C44-77 or approved equal.

3) Casing Pipe

Casing pipe, where required under the street, shall be steel pipe conforming to A.S.T.M. Designation A-139, Grade B, electric fusion welded steel pipe. The pipe shall have a minimum yield strength of 35,000 psi. The exterior and interior of the pipe shall have a coal tar varnish coating. Minimum wall

thickness: 0.250".

4) Ductile Iron Pipe Fittings

Fittings shall be furnished in accordance with AWWA C110 or AWWA C153, latest revisions, and shall be a minimum of 350 psi pressure class rating. Joints shall be mechanical joints with retainer glands except where shown otherwise on plans. Either fusion-bonded epoxy coating conforming to AWWA C116, or standard cement mortar lining conforming to AWWA C104, shall be furnished for fittings.

5) PVC Casing for Services

PVC casing pipe used for long-side services shall be schedule 40 and a minimum of 2" in diameter

203.02 Fire Hydrants

All fire hydrants shall comply in all respects with Marietta Water Standards and shall be designed and manufactured to comply with the latest revision of AWWA C502-85 for dry-barrel fire hydrants. The hydrants shall be designed for 250 pounds working pressure, of simple design, easy to operate, effectively and positively drained and protected from damage by freezing, and convenient for repairing and replacing parts.

Hydrants shall be equipped with one 4-1/2" pumper nozzle and two 2-1/2" diameter hose connections, which shall have threads meeting the latest requirements of the State Fire Insurance Commission. Hydrants shall have a safety flange on the barrel and a safety coupling on the valve stem, to prevent damage to barrel and stem in case of traffic accident. Fire hydrants shall be East Jordan Iron Works Water Master 5CD250 or approved equal.

The connection at the base of the hydrant shall be mechanical joint with ductile iron retainer gland for 6" ductile iron pipe. The valve opening shall meet the requirements of the AWWA Specifications for a 5-1/4" hydrant. The valve, valve seat and inner working parts shall be easily accessible. The height from the surface of the ground to the bottom of the pumper nozzle shall be no less than 18". Each hydrant shall be factory painted with a silver reflecting paint.

Each hydrant shall be tested to 200 psi. The first test shall be made with the valve closed. The second test shall be made with the main valve open but all nozzles closed. While the test is being carried on, the hydrant shall be subjected to a hammer test. Any hydrant showing defects by leakage, sweating, or

otherwise shall be rejected. The barrel and all parts shall withstand these tests. These tests shall be made in the field after the hydrants are installed.

Leads from the main line to the fire hydrant shall use 6" ductile iron pipe and shall have a 6" gate valve between the main line and fire hydrant. The valve shall be connected to the main line by using a locked hydrant tee. Whenever possible , the hydrant shall be connected to the valve by using a locked hydrant adapter.

203.03 Valves and Accessories

1) Gate Valves

Valves 16" and smaller shall be gate valves. The valves shall be of non-rising stem design, and have an iron body, bronze mounted, resilient seated, meeting all requirements of AWWA C509. Valves shall be designed for a minimum working pressure of 250 psi and shall have 2" square operating nuts, except in meter vaults where handwheels shall be installed. Valves shall open when turned counter-clockwise. All interior ferrous surfaces of valves shall have an epoxy coating meeting the requirements of AWWA C550.

Valves sized 6" through 16" shall be Mueller Co. A-2360 with mechanical joints or approved equal. Where flange joints are used, flanges must meet the requirements of AWWA C115, latest revision.

2) Butterfly Valves

All butterfly valves shall be bubble-tight closing at the rated pressure with flow in either direction, and shall be satisfactory for applications involving throttling service and frequent operations or operations after long periods of inactivity. Valves shall meet the full requirements of AWWA C504, latest revision, for 250 psi working pressure and shall be suitable for above ground or direct buried service.

All interior ferrous surfaces of valves shall have an epoxy coating meeting the requirements of AWWA C550. Valve bodies shall be equipped with integrally cast mechanical joint ends meeting AWWA C111.

Butterfly valves installed underground shall come equipped with a manual operator. This manual operator shall be of the traveling nut, self-locking type and shall be designed to hold the valve in any intermediate position between fully open and fully closed without creeping or fluttering. Operators shall be equipped with mechanical stop-limiting devices to prevent over travel of the disc in the open and closed positions. Valves shall open when turned

counter-clockwise. Operators shall be fully enclosed and designed for direct buried operation.

3) Valve Boxes

Valve boxes for valves shall be approved standard cast iron, adjustable-shaft boxes having a minimum shaft diameter of 5-1/4 inches. The casting shall be coated with two coats of coal tar pitch varnish. The lids of all boxes shall bear the word "Water". Boxes shall be East Jordan Iron Works model 8550237 . Valve boxes shall be flush with the final grade after grading and / or paving. Valve box extensions are not acceptable for use in roadways.

4) Air and Vacuum Relief Valve Assemblies

The air release and vacuum break valve shall be of the compact single chamber design with solid cylindrical HDPE control floats housed in a tubular stainless steel body with epoxy powder coated cast iron or steel ends secured by stainless steel tie rods. The valve shall have an integral orifice mechanism which shall operate automatically to limit transient pressure rise induced by closure to twice valve rated working pressure. The intake orifice shall be equal to the nominal size of the valve. Large orifice sealing shall be effected by the flat face or the control float seating against a nitrate rubber o-ring housed in a dovetail groove circumferentially surrounding the orifice. Discharge of the pressurized air shall be controlled by the seating and unseating of a small orifice nozzle on a natural rubber seal affixed into a control float. The nozzle shall have a flat seating land surrounding the orifice so that damage to the rubber seat is prevented. All components shall be easily replaced. Connection to valve inlet shall be NPT.

The valve shall be Vent-O-Mat series RBX or approved equal. Gate valves between water main and air release valve shall be bronze, solid wedge with screw connection equal to Jenkins Company Figure 370. Meter box shall be equal to the DFW Style D-1200 or approved equal.

5) Tapping Sleeves

Tapping sleeves shall be rated for 250 psi and shall be a Mueller H-615, PowerSeal 3490MJ or approved equal.

6) Tapping Valves

Tapping valves shall be Mueller, mechanical joint, 250 psi, T-2360, or approved equal.

7) Backflow Preventers

In accordance with Marietta Water's Cross Connection Control Program, water service customers may be required to have a backflow prevention device selected on the basis of the customer's risk categorization as determined by Marietta Water. The backflow preventers listed below meet the current Marietta Water requirements; Other manufacturer's devices that meet the requirements listed in parentheses are acceptable if approved by Marietta Water. The Developer must contact Marietta Water to acquire the most current list of approved backflow preventers.

<u>1" - 2" Lines</u>

Low Risk - Ford Model HHS31-323 or approved equal. (ASSE 1024)
Medium Risk - Hersey Model FDC or approved equal. (ASSE 1015, AWWA C510, USC)
High Risk - Hersey Model FRP II or approved equal. (ASSE 1013, AWWA C511, USC)

<u>2 1/2" - 10" Lines</u>

Low Risk - Wilkins Model 950 or approved equal. (ASSE 1015, AWWA C510, USC)
Medium Risk - Wilkins Model 950 or approved equal. (ASSE 1015, AWWA C510, USC)
High Risk - Wilkins Model 975 or approved equal. (ASSE 1013, AWWA C511, USC)

The initials of specification-issuing agencies shall be understood to mean the organization listed below:

ASSE American Society of Sanitary Engineering
AWWA American Water Works Association
USC University of Southern California Foundation of Cross Connection Control and Hydraulic Research

8) Pipe Connection Couplings

Pipe connections between new pipe and existing pipe shall be made with compression couplings for pipe sizes 2" and below. Compression couplings shall have lock down screws such as provided by the Ford C45-77 or the Ford C44-77. For pipe sizes above 2", M.J. solid sleeves (long style) shall be

used. Spacer rings must be used at all solid sleeve locations. A spacer ring is defined as a short section of pipe cut to fit into the gap between the two plain ends of pipe at the sleeve location.

9) Curb Stops and Wyes

All metal parts of curb stops shall be made of bronze. The stops shall be approved by Marietta Water. The cock shall be operated with a combined cap and tee and shall open when turned counter-clockwise. All curb stops shall have locking device. Curb stops smaller than 2" shall have a flare by female iron pipe connection. These curb stops shall be Ford Model B21-444W or approved equal.

Curb stops 2" in size shall have a compression joint inlet with flange outlet, and the compression end shall also have a stainless steel clamp screw. These curb stops shall be Ford Model BF43-777W or approved equal.

Where approved for use, wyes shall be Ford model Y22-247 or approved equal.

10) Corporation Cocks

Corporation cocks smaller than 2" in size shall have an AWWA tapered thread inlet and flare outlet connection. All metal parts of the cock assembly shall be made of bronze. The cock shall be operated with a tee head and shall open when turned counter-clockwise. The cock shall be a Ford model FB600 or approved equal. Services 1" shall be direct tapped.

Corporation cocks 2" and larger in size shall have male iron pipe thread inlet and compression joint outlet, and the compression end shall also have a stainless steel clamp screw. All metal parts of the cock assembly shall be made of bronze. The cock shall be operated with a tee head and shall open when turned counter-clockwise. The cock shall be a Ford model FB1100 or approved equal. Service saddles are required for all services larger than 1" in diameter.

11) Meter Boxes

Meter boxes for services shall be made of polypropylene materials. The box shall be sized according to the meter size. See corresponding detail in section 400 for specific size requirement. The lid shall be made of the same material as the box, and shall have an AMR locator pad attached to the bottom of the lid to accept AMR transponders. The lid shall seat securely and evenly inside the

meter box and shall not overlap the top edge of the box. Meter Boxes shall be DFW Plastics Series A 1200.SBAMR.

12) Service Saddles

Service saddles shall be equal to Smith-Blair 313 double strap clamps suitable for use with ductile iron or PVC pipe. **Direct taps are required for all 1 inch service connections. Service saddles are required for taps larger than 1" in diameter.**

13) Meters

Water meters shall be furnished and installed by Marietta Water. All meters must be capable of reading accurately at low flows. All meters shall read in gallons. All meters shall come equipped with a touch-read or radio-read compatible with Marietta Water's meter reading equipment. The bypass shall be located inside the vault.

14) Retainer Glands

Retainer glands for mechanical joints shall utilize standard gaskets and bolts conforming to AWWA C111 and shall be EBAA Mega-Lug or approved equal.

15) Pressure Reducing Valve

Pressure reducing valves shall be Watts Regulator 25 AUB or approved equal.

16) Valve Markers

One concrete valve marker shall be furnished and set at each line valve. The marker shall be made of 3,000 PSI concrete, and shall be four feet (4') long and 4" on each side, with two #3 or #4 reinforcing bars as shown on the detailed drawings.

The markers shall be set with an even number of feet between the center line of the valve and the center line of the valve marker, and the distance in feet between the valve and marker shall be stamped in the aluminum disc on the marker at the time of setting.

17) Casing Spacers

Casing spacers shall be Model CCS stainless steel as manufactured by Cascade Waterworks Mfg. Co. of Yorkville, Illinois, or approved equal. Spacers shall be sized and spaced as recommended by the manufacturer.

18) Concrete for Thrust Blocks and Thrust Collars

Concrete for thrust blocks and thrust collars shall have a minimum compressive strength of 3,000 PSI at 28 days.

19) Subgrade Stabilizer Stone

Stabilizer for subgrade shall be either approved crushed stone or gravel, uniformly graded from 1/4" to 1-1/4" in size.

20) Gaskets for Joint Restraint Inside Casings

Inside of casings, the D.I.P. water main joints shall be slip joint restrained by using American "Fast-Grip" gaskets or approved equal.

21) Polyethylene Tubing for Ductile Iron Pipe

Polyethylene tubing shall be manufactured of virgin polyethylene material conforming to the requirements specified in AWWA C105, Section 4.1.1 for linear, low density, polyethylene film. The polyethylene film shall have a minimum thickness of 8 mil. The polyethylene encasement material shall be provided in tube sizes adequate for the various sizes of pipe. Polywrap for water mains shall be black; Polywrap for sewer force mains shall be green.

203.04 General Requirements

Any pipe, solder or flux used in the installation or repair of the water lines must be lead-free. Pipes and fittings must not contain more than 8.0% lead and solders and flux must not contain more than 0.2% lead.

204. EXCAVATION AND CONSTRUCTION

204.01 General

1) It shall be expressly understood that these specifications are for installation of all underground water mains and appurtenances.
2) All work shall conform to the applicable provisions of the AWWA Specifications of latest revision except as otherwise specified herein.
3) Compliance with applicable safety regulations is the responsibility of each company engaged in the work. Marietta Water assumes no responsibility for the actions of others on the job site. It is the responsibility of those installing water mains and appurtenances to conform to OSHA regulations.

204.02 Trench Excavation

1) Trenches shall have a minimum width of twelve (12) inches plus the diameter of the outside of the bell of the water main. The trench shall be of a depth such that the top of the water main is a minimum of 48” below grade, 48" below the edge of pavement, or 36” below the drainage ditch paralleling the road, whichever is deepest. Maximum trench width at the top of the pipe shall not be more than the outside diameter of the bell plus two feet. In cases where water lines cross sanitary sewers, there shall be a minimum of 18 inches vertical separation between the water and sewer mains. Both mains shall be D.I.P. At crossings, one full length of water pipe must be located so that both joints are as far from the sanitary sewer as possible. In cases where water mains parallel sewer mains there shall be a minimum of ten (10) feet horizontal separation maintained between the mains. These distances are measured edge to edge.

   Pipe trenches shall be straight and true to grade and in the location shown on the plans. Trenches shall be dug so that the pipe can be laid to the alignment and depth required, and the trench shall be of such width and shall be braced and drained so that the workmen may work therein safely and efficiently. No chocking under the pipe will be permitted. All joints shall be as specified herein. Excavation must be made under the bell of each pipe so that the entire length of the pipe will lie uniformly on the bottom of the trench and the pipe weight shall not rest on the bells. Trenches shall be free of water during the work.

   All changes in grade shall be made gradually. At points of interference with storm sewers and cross drains on D.O.T. right-of-way, the pipe will be run under the conflicting utility. Where the water main crosses beneath a storm sewer, there shall be a minimum of 12" clearance between the main and the

storm sewer. Where necessary, the line shall be lowered at valves so that the top of the valve stem is approximately one foot below the finished grade. The trench shall be deepened to provide a gradual approach to all low points of the line.

In laying pipe across water courses, railroad crossings, or depressions of any kind, the minimum depth here specified shall be maintained at the bottom of the depression. Railroad crossings shall be installed according to American Railway Engineering Association requirements.

No excavation shall be made under highways, streets, alleys or private property until satisfactory arrangements have been made with the State, City, County or owners of the property to be crossed. All excavated material shall be placed so as to not interfere with public travel on the streets and highways along which the lines are laid. Not more than 100 feet of trench shall be opened on any line in advance of pipe laying.

When possible, all crossings of paved highways or driveways shall be made by boring or jacking the pipe under the pavement and shall be done in such manner as not to damage the pavement or subgrade, unless the casing or pipe is in solid rock, in which case the crossing shall be made by the open cut method or by tunneling.

Wherever streets, roads, or driveways are cut, they shall be immediately backfilled and compacted after the pipe is laid and shall be maintained in first-class condition as passable at all times until repaved. Backfilling, compaction, dressing and clean-up shall be kept as close to the line laying crew as is practical, and negligence in this feature of the work will not be tolerated.

In excavation and backfilling and laying pipe, care must be taken not to remove or injure any water, sewer, gas or other pipes, conduits or other structures without an order from the Designer. When an obstruction is encountered, the Contractor shall notify the Designer who will have the Owners of the obstruction adjust same or make necessary changes in grade and/or alignment to avoid such obstruction. Any house connection, drains or other structures damaged by the Contractor shall be repaired or replaced immediately.

All excavation shall be placed on one side of the trench, unless permission is given by Marietta Water to place it on both sides. Excavation materials shall be so placed as not to endanger the work and so that free access may be had at all times to all parts of the trench and to all fire hydrants or water valve boxes, etc. All shade trees, shrubs, etc., shall be protected.

The Contractor shall furnish, install and maintain such sheathing, bracing, etc., as may be required to support the sides of the excavation and to prevent any movement that might injure the pipe, or cause sloughing of the street or trench, or otherwise injure or delay the work or interfere with adjoining structures.

2) All materials shall be considered as rock which cannot be excavated except by drilling, blasting or wedging. It shall consist of undecomposed stone in solid layers or of boulders of not less than one-half cubic yard. Wherever rock is encountered in the excavation, it shall be removed by suitable means. If blasting is used for removal of rock, the contractor shall take all proper safety precautions. He shall comply with all rules and regulations for the protection of life and property that may be imposed by any public body having jurisdiction relative to the handling, storing and use of explosives. He is fully responsible for filing for and acquiring any blasting permits which may be required by those agencies with such jurisdiction. Before blasting, the Contractor shall cover the excavation with heavy timbers and mats in such a manner as to prevent damage to persons or the adjacent property. Rock excavation near existing pipelines or other structures shall be conducted with the utmost care to avoid damage. The Contractor shall be wholly responsible for any damage resulting from blasting, and any injury or damage to structures or property shall be promptly repaired by the Contractor to the satisfaction of Marietta Water and property owner.

3) Rock in trenches shall be excavated over the horizontal limits of excavation and to depths as follows:

Size of Pipeline Inches	Depth of Excavation Below Bottom of Pipe, Inches
6	6
8 to 18	8
18 to 30	10
Over 30	12

In rock excavation, the backfill from the bottom of the trench to one foot above the top of the pipe shall be finely pulverized soil, free from rocks and stones. The rest of the backfill shall not contain over 75% broken stone, and the maximum sized stone placed in the trench shall not weigh over 50 pounds. Excess rock and fragments of rock weighing more than 50 pounds shall be loaded and hauled to disposal. If it is necessary, in order to comply with these specifications, selected backfill shall be borrowed and hauled to the trenches in rock excavation.

Sides of the trench shall be trimmed of projecting rock that will interfere with backfilling operations. Rock excavation by blasting shall be at least 75 feet in advance of pipe laying.

204.03 Backfilling

1) After the pipe has been laid, backfilling shall be done in two (2) distinct operations. In general, all backfill beneath, around and to a depth of twelve (12") inches above the top of the pipe shall be placed by hand in four (4") inch layers for the full width of the trench and thoroughly compacted by hand with vibratory equipment. The remainder of the backfill shall be placed in 6" layers and compacted to the top of the trench, either by pneumatic hand tamps, hydro-tamps, or other approved methods. Care shall be taken so that the pipe is not laterally displaced during backfilling operations. The backfill lifts shall be placed by an approved method in accordance with that hereinafter specified. Backfill materials shall be the excavated materials without bricks, stone, foreign matter or corrosive materials, where not otherwise specified on the plans.

2) Backfill under permanent concrete or bituminous pavement and as elsewhere specified or indicated on the plans shall be approved bank-run sand or gravel or crushed stone free from large stones and containing not more than ten percent (10%) by weight of loam or clay. This backfill shall be compacted to one hundred percent (100%) as determined by the Standard Proctor test for the top two (2) feet of trench and ninety-five percent (95%) by the Standard Proctor test from pipe bedding to two (2) feet below trench top. Mechanical vibrating equipment shall be used to achieve the required compaction. Pavement shall be replaced immediately after the backfilling is completed.

3) Backfill under gravel or crushed stone surfaced roadways shall be the approved suitable excavated material placed in six (6) inch layers thoroughly compacted for the full depth and width of the trench, conforming to the compaction, density compaction method and materials as specified in "2" above.

4) Backfill in unpaved areas shall be compacted with mechanical vibrating equipment to ninety-five percent (95%) as determined by the Standard Proctor Test. Backfill material from pipe bedding to ground surface by shall be excavated earth free from large stones and other debris.

5) Contractor shall fully restore and replace all pavement, surface structures, etc., removed or disturbed as part of the work to a condition equal to that

before the work began.

6) Where sheeting is used in connection with the work, it is in no case to be withdrawn before the trench is sufficiently filled to prevent damage to banks, road surfaces, adjacent pipes, adjacent structures or adjacent property, public or private.

7) All costs of compaction testing shall be the responsibility of the Developer.

204.04 Laying Pipe

1) All pipe shall be laid straight, true to line and grade. No shimming or blocking up of the pipe shall be allowed. All pipe must be backfilled to the top of the pipe and the backfill tamped on each side simultaneously to develop a bed for the pipe. When the work is not going on, all pipe openings shall be securely closed by the insertion of the proper size plug and caulking so that dirt and debris will not be washed into the pipe in case of rain.

2) In making the joints with ductile iron pipe, the spigot end of the pipe and the inside of the bell shall be thoroughly cleaned and the gasket inspected to see that it is properly placed; Lubricant shall be applied to the spigot end of the pipe and it shall be inserted into the bell of the adjoining pipe to the stop mark on the pipe.

204.05 Thrust Restraint for Pressure Lines - Reaction Blocking

1. Underground piping laid around curves and at all unsupported changes of direction, all tees, wyes, crosses, plugs and other like fittings shall be solidly and properly blocked with concrete against solid earth to take the reaction of the main pressure and to prevent lateral movement of the pipe or fittings when under pressure. Reaction blocking shall be installed at all locations requiring same and where tie rods and clamps are not called for in the plans. Concrete for reaction blocking shall have a minimum compressive strength of 3,000 psi at twenty-eight (28) days. The blocking, unless otherwise shown, shall be so placed that the pipe and fitting joints will be accessible for repair.

2. Reaction blocking shall be constructed in conformance with the Standard Detailed Drawings for Reaction Blocking. Prior to blocking any joint or fitting with concrete, that joint or fitting shall be wrapped with polyethylene film is such a manner that the concrete will not stick directly to the fitting, but that the load bearing capacity of the blocking will not be affected.

204.06 Setting Fire Hydrants

Fire hydrants shall be placed at the locations shown on the plans. Gate valves for fire hydrants shall be connected directly to the main by means of a "Locked Hydrant Tee". All other connections between the main and the fire hydrant shall be mechanical joint. Fittings shall be restrained by a "Locked Hydrant Adapter" whenever the fire hydrant is located close enough to the main to allow its use. Not less than four cubic feet of No.5 or No.57 stone shall be placed around the base of the hydrants, as shown in the Standard Detail 401.02. Before placing the hydrants, care shall be taken to see that all foreign material is removed from within the body. The stuffing boxes shall be tightened and the hydrant valve opened and closed to see that all parts are in first class working condition. All hydrant openings shall be kept capped, except when hydrant is being worked on.

When a fire hydrant has been constructed but is not yet in service, the Contractor shall provide and attach to the fire hydrant, flags or collars indicating that the fire hydrant is not in service. Said flags or collars shall remain on the fire hydrant until it is put into service. Whenever an existing fire hydrant is taken out of service, whether temporarily or permanently, it shall be equipped with a flag or collar indicating that it is not in service. The Contractor shall provide and install flags or collars as required and shall notify the Fire Department whenever the operating status of any fire hydrant changes.

FIRE HYDRANTS SHALL NOT BE OPERATED WITH ANY TOOL EXCEPT A SPECIFICALLY DESIGNED FIRE HYDRANT WRENCH. If the Contractor observes any other contractor or person operating a fire hydrant with an unapproved fire hydrant wrench, he shall report that fact to Marietta Water immediately. It is the Contractors responsibility to insure that all new facilities are maintained in new condition until final completion of the project and acceptance by Marietta Water. Fire hydrants with damaged operating nuts shall not be accepted.

204.07 Setting Valves and Fittings

Valves and fittings shall be placed where shown on the plans. Valves shall be set plumb, and shall have cast iron valve boxes. The valve boxes shall be placed directly over the valve and set plumb, the top of the box being brought to the surface of the ground. After the boxes are in place, earth shall be filled in the trench and thoroughly tamped around the box. After all settlement has taken place, a concrete collar shall be constructed for each valve box.

Fittings shall be properly braced to insure that they will not be blown off or broken loose under the greatest possible working pressure. All fittings shall be mechanical joint unless specified otherwise. In situations where there is

insufficient undisturbed earth to act as a bearing surface or where otherwise directed by the Authority, fittings shall be restrained by the use of threaded rods or other method acceptable to the Authority. Prior to blocking any joint or fitting with concrete, that joint or fitting shall be wrapped with polyethylene film in such a manner that the concrete will not stick directly to the pipe but that the load bearing capacity of the blocking will not be affected.

204.08 Placing of Steel Casing Pipe

Casing pipe shall be installed at the locations shown on the plans. Unless directed otherwise, the installation procedure shall be the dry bore method. The hole is to be mechanically bored and cased through the soil by a cutting head on a continuous auger mounted inside the casing pipe. The installation of the casing and boring of the hole shall be done simultaneously by jacking. Lengths of pipe are to be full circumference butt-welded to the preceding section installed. Excavation material will be removed and placed at the top of the working pit. Backfill material and methods of backfilling and tamping shall be as required under Section 204.03. Carrier pipe shall be D.I.P. and inserted within the casing by use of stainless steel casing spacers. Intervals shall be as recommended by the manufacturer. Inside of casings, the water main joints shall be slip joint restrained by using American "Fast-Grip" gaskets or approved equal.

204.09 Marking Location of Valves

1) Each main line water valve shall be marked by cutting a letter "V" in the curb. The "V" shall be turned to point toward the valve. The letter height shall be 6".

2) Concrete valve markers shall be set for main line water valves with an even number of feet between the center line of the valve and the center line of the aluminum disc in the top of the marker, and the distance in feet between the valve and marker shall be stamped in the marker at the time of setting.

204.10 Dewatering Trenches

The Contractor shall do all necessary pumping or bailing, build all drains and do all other work necessary at his own expense to keep the trenches clear of water during the progress of the work. No structure shall be built or pipe shall be laid in water, and water shall not be allowed to flow over or rise upon any concrete, masonry or pipe until the same has been inspected and the concrete or joint material has thoroughly set. All water pumped, bailed or otherwise removed from the trench or other excavation shall be conveyed in a proper manner to a suitable place of discharge where it will not cause injury to the public health or to

public or private property or to work completed or in progress, or to the surface of the streets or cause any interference with the use of same by the public. All soil and erosion control standards must be followed during dewatering operations. Best management practices must be used.

204.11 Bracing, Sheeting, and/or Shoring

Whenever the condition of the ground is such that it is necessary to protect the work, the street, the roadway or the workmen, the sides of the trench shall be supported with suitable bracing, sheeting and/or shoring to be furnished by the Contractor at his own expense.

204.12 Location and Protection of Existing Underground Utilities

It is the responsibility of the Contractor to locate the underground utilities and to protect same. Utility lines or services damaged by the Contractor shall be repaired by the Contractor at his own expense.

204.13 Connection to the Existing Marietta Water System

1) The Developer's private contractor shall make required connections and taps to build an extension to Marietta Water's water system or to relocate a fire hydrant. Marietta Water's Inspector will supervise the tap and all associated work.
2) In subdivisions, the Developer’s private contractor shall make all taps on the new water main, extend copper to the curb stop in the meter boxes, and set the boxes for each lot. For all other types of developments, such as a single lot in an existing subdivision or a commercial site, Marietta Water shall make all required service taps and set the meters in boxes or vaults as needed.
3) The contractor shall give Marietta Water a minimum of 48 hours notice prior to any water system work.
4) The Contractor will provide proper traffic control devices and certified personnel to direct traffic if required.
5) All taps shall be wet taps (on pressurized water mains in service). All taps to be made with saddles or tapping sleeves or tees with sleeves and valves as required by Marietta Water. Direct taps are required for all ¾” and 1” service connections. Service saddles are required for service taps larger than 1" in diameter.

204.14 Street Cuts

1) All paved roads will be bored and cased. A bore must be attempted before consideration will be given to cutting the street.
2) Existing roadways shall not be open cut unless permission is granted by the Georgia D.O.T. and/or the Marietta Public Works Department or Cobb County DOT. Submittal of an authorization letter from the appropriate governing agency is required.
3) One lane of traffic shall be maintained open at all times. Construction work shall be limited to time between 9 A.M. and 4 P.M.
4) The Contractor shall furnish traffic control devices and certified personnel to direct traffic, if required.
5) The above requirements may be altered with the written approval of Marietta Water in extenuating circumstances.
6) Assuming that a road bore has been attempted and failed, or that the Developer has received permission to open cut a road, pavement replacement shall adhere to the following guidelines:
   a. Removing and replacing pavement shall consist of removing the type of pavement and base encountered, and replacing same to its original shape, appearance and riding quality, in accordance with the detailed plans. Where possible, all pipe under existing paved driveways will be either free bored or installed in casing. Casing will be required where the installation is under any roadway.
   b. Concrete pavement shall be replaced with pavement of a thickness equal to that removed, or 6" for driveways and 8" for roads, whichever is thicker. The concrete shall meet the specifications of the D.O.T. for concrete paving.
   c. Where bitumastic paving is replaced, a base course of 3000 psi concrete shall be placed over the ditch line. The concrete shall be 6" thick for driveways and parking lots and 8" thick for public roads. The top of this base course shall be left with a rough float finish 1-1/2" below the surface of the existing paving. After the concrete has attained its strength, a tack coat of AC-15 or equal shall be applied at the rate of 0.25 gallons per square yard, and a plant mix surface course applied over this, and finished off level with existing pavement.
   d. Unless otherwise directed in writing all pavement will be removed to a width of the trench plus 12" on each side as shown on the detailed drawings. Under normal circumstances, the maximum allowable trench width shall be the nominal diameter of the pipe plus 24 inches.

204.15 Standard Detailed Drawings

Installation of fire hydrants, water valves, valve boxes, meters, long side services water lines, etc. shall be made in accordance with the Standard Detail Drawings in these specifications (Section 400).

204.16 Clean-Up

1) The Contractor shall remove all unused material, excess rock and earth, and all other debris from the construction site as closely behind the work as practical. If the Contractor fails to maintain clean-up responsibilities as directed by Marietta Water's representative, Marietta Water may choose to use their own forces to do so, followed by an invoice to the Developer for Marietta Water's work.

2) All trenches shall be backfilled and tamped before the end of each days work.

3) Prior to requesting the final inspection, the Contractor shall do the following:
   a. Remove and dispose of in an acceptable manner all shipping timbers, shipping bands, spacers, excess materials, broken material, crates, boxes and any other material brought to the job site.
   b. Repair or replace any work damaged by the water line construction.
   c. Regrade and smooth all shoulder areas disturbed by the water line construction.
   d. Pour concrete collars around all valve boxes outside paved areas.
   e. Insure that all fire hydrants are set to grade and that all valves have been located and are fully open.
   f. All easement areas shall be cleared of trees, stumps and other debris and left in a condition such that the easement can be maintained by bush-hog equipment.
   g. All shoulders, ditches, culverts, and other areas impacted by the water main construction shall be at the proper grades and smooth in appearance.
   h. A uniform stand of grass or mulch for erosion protection, as defined in the **Manual For Erosion and Sediment Control In Georgia**, is required over all road shoulders and water main easements prior to Marietta Water's acceptance of the water main.
   i. If work is performed on a Georgia D.O.T., City of Marietta, or Cobb County right-of-way, a letter from the governing agency is required to be submitted after construction is complete stating that grassing, clean-up, drainage, etc. is acceptable.

204.17 Interruption of Water Supply During Construction

A minimum of 24 hours advance notice shall be given to any occupied building served by a water line which is required to be shut off. Occupants shall be informed of the date, time of cutoff and the duration of stoppage. Failure to do so will make the Contractor liable for any damages reported to Marietta Water's Office. For outages affecting several customers, 48 hours notice shall be prepared and given to the affected customers and must be coordinated with Marietta Water.

204.18 Barricades

The Contractor shall provide, erect and maintain all necessary barricades, suitable and sufficient red lights, danger signals and necessary precautions for the protection of the work and the safety of the public. Street closures must be approved by Marietta Public Works. Streets closed to traffic shall be protected by effective barricades on which shall be placed acceptable warning signs. Barricades shall extend completely across the street which is to be closed, and shall be illuminated at night by lights not farther than (5) feet apart, and lights shall be kept burning from sunset to sunrise.

204.19 Grassing

All areas outside structures and along pipelines where the earth is disturbed shall be grassed. After the soil has been properly prepared, the seed shall be planted. After the seeds have been planted, the moisture content of the soil shall be maintained at the optimum amount to insure germination of the seed and growth of the grass.

Immediately after the initial watering of seeded areas, the contractor shall apply a mat of hay or rye, wheat or oat straw over the area at a uniform rate of not less than 1-1/2 ton of mat to the acre. The minimum depth of the straw shall be 2 inches and the maximum depth 3 inches. After placing mat or hay or straw, emulsified asphalt shall be sprayed over the mat at a uniform rate of 0.15 gallon per square yard. After the grass has shown a satisfactory growth (approximately 30 days after planting), nitrate of soda shall be applied at a uniform rate of 100 pounds per acre, followed by sufficient water to dissolve the fertilizer.
The Contractor shall do all maintenance work necessary to keep all planted areas in satisfactory condition until the work is finally accepted. This shall include mowing, repairing washes that occur, reseeding, and water as required to produce a healthy and growing stand of grass. Mowing will be required to remove tall and obnoxious weeds before they go to seed.

It is the intent of these specifications to produce a stand of grass that is alive and growing, without any bare spots larger than one square foot. The Contractor shall repeat all work, including plowing, fertilizing, watering, and seeding as necessary to produce a satisfactory stand.

205. INSPECTION AND TESTS

205.01 General

1)All lines designed to operate under pressure shall be successfully tested. Tests of installed piping shall consist of a pressure and leakage test and a disinfection test.

2)All piping to be tested must satisfactorily comply with these tests before being eligible for acceptance. In general, tests shall be conducted in accordance with AWWA C600 and C651 except as otherwise herein specified.

205.02 Pressure and Leakage Testing

1) After all piping has been placed, each section between line valves shall be tested by the Contractor in the presence of Marietta Water's inspector and tests shall be continued until all leaks have been made tight to the satisfaction of the Inspector. The Contractor shall furnish all necessary meters, pumps, gauges, bulkheads, and other materials and appliances necessary to conduct the test as herein required. Every precaution must be taken to valve-off or otherwise protect control equipment in or attached to the pipe line to prevent damage thereto.

2) Before applying the specified test pressure, all air shall be expelled from the pipe. If hydrants, blow-offs or air release valves are not available at the high places, the Contractor shall make the necessary taps at points of highest elevation before the test is made and insert plugs before the test has been completed.

3) Prior to the pressure test, pipe laid in trenches shall be backfilled adequately to secure the pipe during the test. Any observed leakage shall require corrective measures to pipe lines and/or joints to the satisfaction of the Inspector.

4) Marietta Water will furnish the necessary water for testing and disinfection of the lines; however, any water lost through breakage of lines or unnecessary or excessive flushing of lines will be charged to the Contractor at the current

residential rate. All lines shall be tested to a pressure of 200 psi for a minimum time of 2 hours. Test pressure shall not vary by more than ± 5 psi for the duration of the test which may require periodic pumping (in which case the added water will be counted as part of the leakage). Lines shall be tested in sections between the valves. The rate of leakage shall not exceed 25 gallons per 24 hours per inch diameter per mile of water main. (See table below.)

LEAKAGE TABULATION

SIZE OF PIPE	GALLONS/HOUR/100 FT.	GALLONS/DAY/100 FT.
12"	.237	5.688
10"	.197	4.728
8"	.158	3.792
6"	.118	2.832

Any section of the line not meeting the above test shall have the leaks found and corrected at once and re-tested until the leakage falls within the limits specified above. Leakage testing must be witnessed and approved by Marietta Water.

205.03 Disinfection

After leakage testing, and all necessary repairs have been made, the lines shall be flushed clean and then disinfected in strict accordance with AWWA Standard For Disinfecting Water Mains, C651, latest revision, subject to the following special conditions:

1) The method of disinfection shall be the Continuous - Feed Method as per AWWA C651, latest revision, Section 5.2. The potable water shall be chlorinated so that after a 24 hour holding period in the main, there will be a free chlorine residual of not less than 10 mg/L.

2) The form of chlorine shall be a 1 percent solution made from either sodium hypochlorite or calcium hypochlorite which shall be measured and pumped into the pipeline. Water must be flowing during the feeding operation and the injection point must be located so that the flow of water will disperse the chlorine throughout the pipeline. AWWA C651 requires the injection point be located at a point not more than 10 feet from the point of connection to the existing water supply. The chlorine should be fed at a constant rate such that

the water will have not less than 25 mg/L free chlorine. The table below gives the amount of chlorine required for each 100 feet (30.5 m) of pipe of various diameters to produce a 25 mg/L concentration.

Chlorination Tabulation

Pipe Diameter (in.)	100% Chlorine (lb.)	1% Chlorine Solution (gal.)
6	0.030	0.36
8	0.054	0.65
10	0.085	1.02
12	0.120	1.44
16	0.217	2.60

3) After 24 hours, the line shall be flushed until the chlorine content is not more than 2.0 parts per million. When this step is completed, the Developer will be responsible for notifying Marietta Water and requesting the Cobb County-Marietta Water Authority to perform the bacteriological sampling and testing water from the disinfected water line. If the samples show evidence of contamination upon testing, the above procedure of disinfection shall be repeated until approved samples are obtained. No connections shall be made to the existing system until all of the samples have been tested and approved by the Cobb County-Marietta Water Authority.

4) The Contractor has the option of discharging the highly-chlorinated water being flushed from the pipeline to the existing sewers (if available) or to open areas where the discharge will not damage the roadbed or adjacent property. All soil and erosion control standards must be followed during dewatering operations. Best management practices must be used.

   Dechlorinating this water prior to discharge may be required. The area where the chlorinated water is to be discharged shall be inspected. If there is any possibility that the chlorinated discharge will cause damage to the environment, then a neutralizing chemical shall be applied to the water to be wasted to neutralize thoroughly the chlorine residual remaining in the water. The highly chlorinated water shall not be discharged near any streams, ponds, lakes or other bodies of water without being dechlorinated.

   The chlorine residual of water being disposed may be neutralized by treating the water with one of the chemicals listed in the table on the following page:

Chemical Required

Residual Chlorine Concentration mg/L	Sulfur Dioxide (SO_2) lb	(kg)	Sodium Bisulfite ($NaHSO_3$) lb	(kg)	Sodium Sulfite (Na_2SO_3) lb	(kg)	Sodium Thiosulfate $Na_2S_2O_3.5H_2O$) lb	(kg)
1	0.8	(.36)	1.2	(.54)	1.4	(.64)	1.2	(.54)
2	1.7	(.77)	2.5	(1.13)	2.9	(1.32)	2.4	(1.09)
10	8.3	(3.76)	12.5	(5.67)	14.6	(6.62)	2.0	(5.44)
50	41.7	(18.91)	62.6	(28.39)	73.0	(33.11)	60.0	(27.22)

Amounts of chemicals required to neutralize various residual chlorine concentrations in 100,000 gal (378.5 m^3) of water.

206. OTHER REQUIREMENTS

No part of these specifications is intended to relieve the developer of his responsibility to comply with requirements of the Georgia D.O.T., the Georgia DNR, the NRCS, the USACOE, the EPA, the EPD, Cobb County, City of Marietta or other appropriate regulatory agency.

Section 300

Sanitary Sewer Specifications

October 2012

SECTION 300
SANITARY SEWER SYSTEM SPECIFICATIONS

301. PRECONSTRUCTION REQUIREMENTS

301.01 Sanitary Sewer Capacity Study

Marietta Water may require a developer to provide a study to determine the available capacity of the existing sanitary sewers for developments where available capacity is questionable. The study must be prepared by a Georgia Registered Professional Engineer and must be approved by Marietta Water.

301.02 Plan Requirements

1) Construction Plans: All plans for public sanitary sewer facilities shall be prepared in accordance with the requirements outlined herein and as required in regulations promulgated by the Georgia Environmental Protection Division (EPD). The developer shall be responsible for submitting plans and other data to the EPD and all other regulatory agencies for required approvals and permits.

   Construction plans for proposed sanitary sewer construction shall consist of the following:

   A. Site Plan with the project name, land lots, district and north arrow, lot layout (if subdivision) or building location (multi-family, commercial, or industrial). Also show all existing and proposed streets and their names, all streams, water courses and storm drains and the discharge points for all drainage structures. The site plan shall show the topography with contour lines at two foot intervals as well as the sewer layout with existing and proposed lines, manhole numbers, line designation and direction of flow. Also, show the size of all lines, the location of proposed service laterals, and proposed and existing easements. The location and sizes of all sewer lines adjacent to the project including the point(s) of connection(s). Note if any other utilities are existing. Drawings shall be to no smaller scale than 1" = 50'. Sheet size shall be 22" x 34".

   B. The design of cross-country (undeveloped property) sanitary sewer lines shall be based on field-run surveys. The site plan for cross-country

sanitary sewer lines need not show contour intervals, but the profiles shall be based on mean sea level elevation. In the event the subdivision is developed in phases, the final construction plans for sanitary sewers may be submitted in phases or units. However, at the time the first phase is submitted, the design professional will submit one copy of the preliminary layout of the entire sanitary sewer system. This layout will show all lines required to serve any lots to be developed and any surrounding property that may be served through the property. The site plans for each phase or unit shall contain a location drawing showing the relationship of the phase or unit to the total project and to the surrounding streets and sanitary sewer outfalls.

C. All sewer lines parallelling streams, creeks or rivers shall detail the actual stream centerline, the top of the bank, and the required undisturbed stream buffer in accordance with the DNR regulations.

D. Profiles should have a horizontal scale of 1" = 50' and a vertical scale of 1" = 10'. The plan view should be drawn to a corresponding horizontal scale. The plan view should normally be shown on the same sheet as the profile. In any case both the plan and profile view should have line designations, station numbers, manhole numbers and any other indexing necessary to easily correlate the plan and profile view.

   Plans and profiles shall show:

   1. Location of streets, sanitary and storm sewers, and related easements.

   2. Profile of ground surface, the grade of the sanitary sewer between each two adjacent manholes, size and material of pipe, length between manholes, invert of sanitary sewer in and out of each manhole, and ground surface elevation at each manhole. All manholes shall be numbered on the plan and correspondingly numbered on the profile and station numbers will be shown for each manhole. The profile of adjacent parallel stream beds and of adjacent lake surfaces, low buildings, and lots shall be shown on the profile.

   3. Locations of all special features such as connections to existing sanitary sewers, service laterals, concrete encasements, collar walls, ductile iron pipe sections, elevated sanitary sewers, piers, special manhole covers such as vented outfall covers or sealed covers, stream crossings, casings under roadways, drop manhole connections, etc.

4. All known existing structures both above and below ground which might interfere with the proposed construction, particularly water mains, gas mains, storm drains, utility conduits, etc.

5. The vertical datum used should be the elevation above mean sea level with benchmarks shown on the plans. Maximum spacing between benchmarks shall be 1000'.

6. Sanitary sewer system materials.

7. Detail of connections to existing lines or manholes.

8. Any other items incidental to the proposed system.

9. The General Notes for Sanitary Sewer System Construction shown on the following page shall be included in each set of plans.

10. Each set of construction plans shall include a reproduction of the standard Utilities Protection Center "Call Before You Dig" symbol.

11. Stream centerline, top of bank and undisturbed buffer.

12. Soil and erosion control plan.

13. Wetland boundaries as defined by the Corps of Engineers.

14. Completed environmental certification form documenting that none of the water / sewer main lines and services, and the structures connected to those services, are being located on or in close proximity of an abandoned landfill site, or any other site used for waste disposal.

BOARD OF LIGHTS AND WATER
SANITARY SEWER SYSTEM CONSTRUCTION
GENERAL NOTES

1. All sanitary sewer system construction must follow the current Marietta Water sanitary sewer system specifications.
2. For D.I.P. sewer lines, the minimum wall thickness shall be Class 50. Wall thicknesses greater than the minimum called for above may be required due to greater depths or varying bedding requirements. Class C bedding is the minimum allowed. The exterior shall be seal coated with an approved bituminous seal coat in accordance with AWWA C151. The interior lining of the pipe shall be a minimum thickness of 40 mils and shall be Protecto 401 ceramic epoxy, coal tar epoxy, polyurethane, Polybond II, or Polyline. Both bare pipe and cement linings conforming to AWWA C104 are NOT allowed for any sanitary sewer pipe.
3. All Polyvinyl Chloride (PVC) sewers 6" to 15" in diameter shall meet the requirements for minimum wall thickness as specified under SDR 35 in ASTM D3034, latest revision. PVC sewers that are 18" in diameter shall have a minimum wall thickness as specified under T-1 in ASTM F679, latest revision. PVC sewers with more than 12 feet of cover may require wall thicknesses greater than SDR 35 or T-1. PVC is not allowed for sewers greater than 18" in diameter or more than 18 feet of cover.
4. Ductile Iron Pipe is required for sanitary sewer lines:
   a. Over and under all storm sewers
   b. With less than 3' of cover or over 18' in cover
   c. Under all stream crossings
   d. Inside casings
   e. With 20% or greater slope
   f. At all other locations specified by Marietta Water
   g. At all drop manholes (See Detail 402-01).
   h. Crossing water mains
5. Information regarding underground utilities on these plans is not guaranteed as to accuracy or completeness. Prior to beginning work, the Contractor shall request a field location through the utilities protection center and any utility owners thought to have facilities in the area. The Contractor shall promptly compare these field-marked locations with the project plans and then notify the designer of any anticipated problems or need for design changes. It is the Contractor's responsibility to excavate or cause the utility owner to excavate for the purpose of determining exact elevations or locations at utility crossings and other critical locations well in advance of the work under this contract. Damage to existing utilities resulting from the Contractor's negligence shall be repaired at the Contractor's expense. The Developer and/or the Developer's Contractor is responsible for verifying the exact location, size, and material of any existing water or sanitary sewer facility proposed for connection or use by this project.
6. All sewer service laterals shall have a minimum diameter of 6" with a cleanout located at the right of way
7. The Developer shall obtain a permit from the Public Works Department and notify the Marietta Water inspector 48 hours before beginning construction (770-794-5253).
8. This project is located in land lots _____, _____ district of Cobb County, Georgia.

Effective 10/2012

9. The existing land use is (describe current land use, such as agricultural, commercial, etc.).
10. The Developer is: (name, address, and telephone number).
11. 24-Hour local contact for erosion and sediment control is (name and 24 hour telephone numbers).
12. This project construction area is _____ acres.
13. This project consists of: (Describe sanitary sewer work to be done, including length of pipe and sizes and number of manholes.).
14. Adjacent areas include (Describe development style of area surrounding project.).
15. All fill slopes will have silt fence at the toe of the slopes.
16. The escape of sediment from the site shall be prevented by the installation of erosion control measures and practices prior to, or concurrent with, land disturbing activities and erosion control measures will be maintained at all times. If full implementation of the approved plan does not provide for effective erosion control, additional erosion and sediment control measures shall be implemented to control or treat the sediment source.
17. All erosion and sediment control measures will be checked daily and any deficiencies noted will be corrected by the end of the day.
18. This property (is / is not) located within a 100 year flood plain as shown on F.I.R.M. Community Panel Number _____, dated _____.
19. An undisturbed vegetative buffer adjacent to all running streams and creeks will be left and maintained in accordance with federal, state and local regulations.
20. Clearing will be kept to an absolute minimum. Vegetation and mulch will be applied to applicable areas immediately after grading is complete. Land disturbing will be scheduled to limit exposure of bare soils to erosive elements.
21. Construction activities will be performed in compliance with all applicable laws and regulations.
22. All marketable timber will be salvaged. Top soil will be salvaged, stock piled and spread on areas to be vegetated. Trees outside of the clearing line will be protected from damage by appropriate markings. Supplemental vegetation will be established.
23. Cleanout of sediment control structures will be accomplished in accordance with the sediment disposal accomplished by spreading on site. Sediment barriers will remain in place until sediment contributing areas are stabilized.
24. Contractor is responsible for staking the alignment of the proposed pipeline prior to pipe installation. If a conflict should arise the contractor shall notify the designer at that time.
25. All excavated dirt shall be placed on the high side of the trench away from any creeks.
26. Any fill dirt over the pipe shall be graded to prevent ponding.
27. The construction easement represents the limits of clearing for the complete job. The contractor shall not clear beyond this limit.
28. No rip-rap shall be placed in any wetland area or in any location or manner so as to impair surface water flow into or out of any wetland area.
29. This project is allowed construction within wetland areas under the Nationwide Permit, Corps of Engineers Regulations, dated November 22, 1991, part 330.5, Section 12 and 33. Part 330.6 shall also be followed, to the maximum extent practicable, in order to minimize the adverse effects of these discharges on the aquatic environment. Failure to comply with these practices may be cause for the District Engineer to recommend or the Division Engineer to take discretionary authority to regulate the activity on a individual or regional basis pursuant to part 330.8 of the Nationwide Permit, Corps of Engineers Regulations.

30. Discharges of material for backfill or bedding for utility lines, including outfall and Intake structures, provided there is no change in preconstruction contours: A "utility line" is defined as any pipe or pipeline for the transportation of any gaseous, liquid, liquefiable, or slurry substance, for any purpose, and any cable, line or wire for the transmission for any purpose of electrical energy, telephone and telegraph messages, and radio and television communication. The term "utility line" does not include activities that drain a water of the United States, such as drainage tile; however, it does apply to pipes conveying drainage from another area. Material resulting from trench excavation may be temporarily side cast (up to three months) into waters of the United States provided that the material is not placed in such a manner that it is dispersed by currents or other forces. The district engineer may extend the period of temporary side casting up to 180 days, where appropriate. The area of waters of the United States that is disturbed must be limited to the minimum necessary to construct the utility line. In wetlands, the top 6" to 12" of the trench should generally be filled with topsoil from the trench. Excess material must be removed to upland areas immediately upon completion of construction. Any exposed slopes and stream banks must be stabilized immediately upon completion of the utility line. The utility line itself will require a Section 10 permit if in navigable waters of the United States (See 33 CFR Part 322). (Section 404)
31. Temporary construction, access and dewatering, temporary structures and discharges, including cofferdams, necessary for construction activities or access fills or dewatering of construction sites; provided the associated permanent activity was previously authorized by the Corps of Engineers or the U.S. Coast Guard, or for bridge construction activities not subject to federal regulation: Appropriate measures must be taken to maintain near normal downstream flows and to minimize flooding. Fill must be of materials and placed in a manner that will not be eroded by expected high flows. Temporary fill must be entirely removed to upland areas following completion of the construction activity and the affected areas restored to the pre-project conditions. Cofferdams cannot be used to dewater wetlands or other aquatic areas to change their use. Structures left in place after cofferdams are removed require a Section 10 Permit if located in navigable waters of the United States. (See 33 CFR Part 322.) The permitee must notify the district engineer in accordance with the "notification" general condition. The notification must also include a restoration plan of reasonable measures to avoid and minimize impacts to aquatic resources. The district engineer will add special conditions, where necessary, to ensure that adverse environmental impacts are minimal. Such conditions may include: limiting the temporary work to the minimum necessary, requiring seasonal restrictions, modifying the restoration plan, and requiring alternative construction methods.
32. All temporary fills shall be removed in their entirety.

(end of General Notes)

E. Detail Drawings - Special detail drawings made to a scale to clearly show the nature of the design shall be furnished to show the following particulars:

i. All stream crossings and storm drain outlets with elevations of the stream bed of normal and extreme high and low water levels.
ii. Details of all special sewer joints and cross sections.
iii. Details of special sewer appurtenances such as manholes, service connections, elevated sewers, piers, pipe bedding, special highway crossings, railroad crossings, etc.

F. The Soil and Erosion Control plan must be shown in relation to the proposed sanitary sewer system. (See Section 301.04)

2) The approved sanitary sewer plan shall not be changed except by written approval of Marietta Water.

3) As-Built Drawings (See section 105):
a. As-built drawings will be the same format (plan and profile; scale) as the original construction plans.
b. Road names and lot numbers (if applicable) shall be on plans.
c. "As-Builts" or "Record Drawings" is to be stamped in large print on plans.
d. Sheet size is to be 22" x 34".
e. Manhole invert and rim elevations, based upon mean sea level..
f. When a phase of a subdivision is completed, a location sketch of entire subdivision with said phase outlined shall appear on plans.
g. Stationing for all manholes, underground structures, casings, changes in pipe materials, and stub-outs.
h. Field measured distances between manholes.
i. Actual azimuths and grades of all sewer lines between manholes.
j. Contour lines are not required.
k. Lateral wye locations must show distance from the downstream manhole. Ends of lateral lines must show the distance from the downstream manhole and offset distance from the main line. Approximate depth of end of lateral should be shown.
l. See Section 105 regarding state plane coordinate requirements for as-builts.
m. Show all permanent easements.
n. Maximum error of as-built measurements shall be:
i. Manhole inverts: Measure to 0.01' with maximum vertical error of 0.15 feet per 1000 feet of horizontal transverse.
ii. Manhole rims: Measure to 0.10' with maximum vertical error of 0.5' per 1000 feet of horizontal transverse.
iii. Horizontal locations: Measure to nearest 1.0' with allowable error of

1.0' per 1000 feet of horizontal transverse.

301.03 Contractor Qualifications

Contractors performing sewer line installations must be licensed in accordance with State of Georgia law and local ordinances and approved by Marietta Water. They should be completely familiar with the procedures and contract requirements associated with this type of project. Unsatisfactory work will cause a contractor to not be approved for future work. Any and all subcontractors must be approved by Marietta Water.

301.04 Erosion and Sedimentation Control Plan

A. The Georgia Soil and Water Conservation Commission has taken provisions of ACT 599 and published a **MANUAL FOR EROSION AND SEDIMENT CONTROL IN GEORGIA**, 2000 Edition (or any more current edition as they are published). Sanitary sewer construction plans and specifications shall include appropriate segments of this manual. Developers, Engineers, Design Professionals and Contractors performing work within the Marietta Water service boundary are responsible for acquiring a copy of this manual and using the best management practices contained therein to control the erosion and sedimentation of the construction site in conformance with the intent of ACT 599.

   Copies may be purchased from the Georgia Soil And Water Conservation Commission, P.O. Box 8024, Athens, Georgia 30603. For additional information, call the Commission at 706-542-3065.

B. Plan: An erosion and sediment control plan, meeting the requirements of applicable state regulations, shall be provided as part of the overall construction drawings.

C. Stream Buffer: Cross-country sanitary sewers adjacent to state waters shall be designed and constructed so as to comply with the buffer requirements as discussed in ACT 599. Sanitary sewers crossing streams shall be kept to a practicable minimum. Where sewers parallel state waters, the sewers and their respective easements shall be located outside the buffer area.

D. Erosion Control Details: Erosion Control Details and Symbols may be taken directly from the **Manual For Erosion and Sediment Control In Georgia**, referenced above.

301.05 Easement Acquisition

A. It shall be the responsibility of the developer to obtain any off-site easements required to connect the project to existing public sanitary sewers. Easements will be conveyed to Marietta Water for all facilities which are to be conveyed to Marietta Water. This process must be started early enough to allow construction of the sanitary sewer before any building construction is to begin. No building permits, water meter, or sanitary sewer tap applications can be issued until off-site water mains and sanitary sewers have been constructed and accepted. A sample sanitary sewer easement agreement is included at the end of Section 301.

B. All easements shall allow adequate room to construct the sanitary sewer and appurtenances. Permanent easements shall be a minimum of 20 feet wide, 10 feet on each side of the line; Except that when the depth of the sanitary sewer exceeds 10 feet the required sanitary sewer easement width shall increase such that the easement width is at least twice the depth from the ground surface to bottom of the pipe.

C. Easement drawings shall be prepared for work outside the development prior to approval of the sanitary sewer plans. The drawings shall be of a size suitable for legal recording and shall be prepared by a Registered Land Surveyor. The drawing will show property lines, the name of property owners with the length of line encroaching on each property owner, size of line, line designation, manhole numbers and stations, width of permanent and construction easement, scale of drawing, north arrow, land lot and district numbers, and a tie to the nearest land lot corner. Any streets or other existing easements shall also be shown. Easement agreements referencing these drawings shall be prepared and attached to the drawings, signed by the property owners, and recorded at the Cobb County Clerk of Superior Court's office. A copy of the recorded easement agreement shall be provided to Marietta Water prior to the construction of off-site facilities.

The title block shall be shown as follows:

Marietta Board of Lights and Water
NAME OF OUTFALL OR SUBDIVISION
EASEMENT FOR PROPOSED
SANITARY SEWER
CROSSING PROPERTY OF
John Doe

LL: District: Section: Date: Revised Date:

301.06 Construction Permitting

The preparation and cost of all required permit applications shall be the responsibility of the Developer. Permit applications shall be submitted to Marietta Water and Marietta Water will submit the applications to the governing authority. Required permits may include but are not limited to USACOE Wetlands Permits, EPD. EPA, D.O.T. Utility Encroachment Permits, Cobb D.O.T., NRCS (Soil and Erosion Control), Railroad Crossing Permits, Utility Crossings, etc.

Construction permits will not be issued until the utility encroachment permit has been obtained and until any special conditions such as insurance requirements have been complied with.

State of Georgia
County of Cobb

Grant of Easement
Sanitary Sewer

This Easement Agreement is made and entered into this _____ day of _____ 20____, by and between _____
Of the aforementioned State and County as party of the first part, hereinafter referred to as "Grantor," and Marietta Board of Lights and Water, a political subdivision of the State of Georgia, as a party of the second part hereinafter referred to as "Grantee":

W I T N E S S E T H

That Grantor for in consideration of the sum of ONE & 0/100 dollar(s) ($ 1.00) and other good and valuable consideration the receipt and sufficiency of which are hereby acknowledged, does hereby grant, bargain, sell, and convey unto Grantee, a perpetual sanitary sewer easement over and under Grantor's property being more particular described as follows:

> All that tract or parcel of land lying and being in Land Lot _____ of the _____ District, 2nd Section of Cobb County, Georgia, and being more particularly described on the plat shown as Exhibit "A", which shows the dimensions of this easement and which is made a part hereof by reference.

The actual sewer easement area may differ from the description shown on Exhibit "A." The actual sewer easement shall be a strip of land _____ feet wide, being _____ feet on either side of the sewer line as actually installed, together with a construction/installation easement up to_____ feet in width, as shown on the attached plat Exhibit "A".

The sanitary sewer easement conveyed herein by Grantor is for the purpose of a sanitary sewer line and includes the rights to enter upon Grantor's property to install, inspect, maintain, replace, or repair the same, as may from time to time be necessary, or whenever Grantee deems fit, with all rights, members and appurtenances to said easement and right-of-way in anywise appertaining or belonging thereto.

Grantor for both itself and its heirs and assigns understands and agrees in connection with this conveyance that any and all construction, digging, grubbing, clearing, filling, or other earth moving or construction activities within or in the easement area conveyed herein are specifically in violation of the rights conveyed herein and are, therefore, prohibited written permission from the Marietta Board of Lights and Water.

Grantor hereby covenants with Grantee that it is lawfully seized and possessed of the real estate

previously described herein and that it has good and lawful right to convey the easement covered by this document, or any part thereof, and that the said easement is free from all encumbrances. The easement herein granted shall bind the herein granted shall bind the heirs and assigns of Grantor and shall inure to the benefit of the successors in title of Grantee.

Additional Stipulations:

IN WITNESS WHEREOF, Grantor has hereunto set its hand and seal the day and year above first written.

_____	_____
Witness (printed name)	Grantor (printed name)
_____	_____SEAL
(Signature)	(Signature)
	_____
	Grantor (Printed Name)
	_____SEAL
	(Signature)

Sworn to and subscribed before me
this the___ day of _____ 20 _____.

_____ (SEAL)
Notary Public

_____
Grantee: Board Manager

Return To:
Marietta Water
627 B. North Marietta Parkway
Marietta, GA 30060
Attn: Kim Holland

****Attach an 8 ½" x 11" Plat – Exhibit "A".****

Effective 10/2012

302. DESIGN CRITERIA

302.01 General

The criteria listed herein is not intended to cover all aspects of design, but rather to mention the basic guidelines and those particulars that are required by Marietta Water. For more detailed criteria, the reader should refer to standard references such as "Ten States Standards", Georgia EPD Regulations, Water Pollution Control Federation Manual of Practice No. FD-5, and other available literature.

All sanitary sewers to be accepted by Marietta Water for ownership and maintenance shall connect to the Marietta Water sewer system by gravity.

302.02 Sanitary Sewers Separate From Storm Sewers

Sanitary sewers shall be designed as separate sanitary sewers only in which rainwater from roofs, streets, and other areas and groundwater from foundation drains are excluded. Overflows from sanitary sewers to storm sewers are not permitted. Any outside drains such as for dumpster pads or wash facilities that are connected to the sanitary sewer must be curbed and covered to provide a permanent separation from storm water.

302.03 Non-Domestic Users

All non-domestic users of the sanitary sewer system must comply with the Cobb County Wastewater Ordinance, Chapter 122, Division 6. Copies of this ordinance are available at Marietta Water.

302.04 Sand and Oil/Grease Interceptors

All users involved in the preparation of food for commercial purposes shall provide oil/grease interceptors. The design criteria is specified in the Cobb County Wastewater Ordinance, Chapter 122, Division 6, Section 122-188.

All users whose wastewater is generally accompanied by unusually large quantities of grit, sand, or gravel shall be required to install a sand trap. All car/truck wash systems shall be required to install sand traps. The design criteria is specified in the Cobb County Wastewater Ordinance, Chapter 122, Division 6, Section 122-188.

302.05 Non-Wastewater Connections Prohibited

No person shall make connection of roof down-spouts, foundation drains, area way drains, swimming pools, dumpster pads or other sources of surface runoff or groundwater to a building sewer or building drain which in turn is connected directly or indirectly to the Marietta Water sanitary sewer system unless such connection is approved for purposes of disposal of polluted surface drainage and for which a discharge permit has been issued.

Dumpster pads may be connected to the sanitary sewer provided the pad is curbed and covered to prevent surface runoff from reaching the drain (see section 302.0) Piping from dumpster pad drains shall have a built in trap to prevent the escape of sewer gas and shall be routed through the grease trap.

302.06 Sanitary Sewers Through Ponds and Lakes

The design professional shall make every effort to avoid locating sanitary sewers in detention basins, ponds, lakes, dam structures, berms or spillways. Consideration for approval of a design with a sewer line located in such a structure shall be given on a case-by-case basis.

302.07 Sizing Factors

The sanitary sewer system should be designed for the estimated ultimate tributary population. Tributary population is considered to be all areas upstream of the discharge point of the system being designed. Sewers will be built to the uppermost property line of the development being served. Consideration should be given to the maximum anticipated capacity of institutions, industrial parks, etc.

In determining the required capacities of sanitary sewers, the following factors should be considered:

1. Maximum hourly sewage flow.
2. Additional maximum sewage or waste flow from industrial plants.
3. Topography of the area.
4. Depth of excavation.

New sanitary sewer systems shall be designed on the basis of an average daily flow of sewage of not less than 400 gallons per household per day. Normally, all sanitary sewers shall be designed with a peaking factor of not less than four (4) and this may be increased as required by Marietta Water. Peak factors will be higher for smaller basins. Sanitary sewers should be designed to carry the peak flow when flowing at a depth of 2/3 pipe diameter. When deviation from the

foregoing per capita rates are demonstrated, a description of the procedure used for design shall be included.

No sewer main shall be less than 8"; No service lateral shall be less than 6".

The Cobb County and City of Marietta land use plans should be consulted and special consideration given to commercial and industrial areas. Where developers are installing major trunk lines or interceptor sewers, the City's long range plan should be consulted as a guide and the sanitary sewer should as a minimum be of the size called for in the long range plan. If proposed land use conditions have changed subsequent to the plan, these changes should be factored into the determination.

302.08 Depth Requirements

Any sewers installed in the street shall be sufficiently deep to provide 6 feet of cover at the inlet end of all service laterals at the street right-of-way, and over any part of the main or service within the street right-of-way. Any sewers on off-street easements shall have a minimum of three feet of cover. In extraordinary circumstances where there is no other alternative, ductile iron pipe shall be used where there is less than three feet of cover. Filling over the pipe to obtain minimum cover is not allowed, if the fill will impede the natural flow of surface water or will cause an erosion problem.

302.09 Slope

All sewers shall be so designed and constructed to give mean velocities, when flowing full, of not less than 2 feet per second based on Manning's Formula using an "n" value of 0.013. The following are the minimum slopes which should be provided; however, slopes greater than these are desirable:

Minimum Slope in Feet

Sewer Size	Per 100 Feet
6"	1.00
8"	0.40
10"	0.29
12"	0.22
14"	0.17
15"	0.15
16"	0.14
18"	0.12
21"	0.10
24"	0.08
27"	0.07
30"	0.06
36"	0.05

These minimum slopes will be used only when sufficient flows are expected to maintain a velocity of 2 feet per second and maintain a cleansing action in the line. Sewers shall be laid with uniform slope between manholes. Sewers on 20 percent slope or greater shall be ductile iron pipe and shall be anchored securely with concrete anchors to prevent displacement by erosion or shock. Maximum slope of sewers shall be 30 percent and sewers shall be designed at less than 20 percent whenever possible.

302.10 Increasing Size

When a small sewer is connected to a larger one, the connection shall be made by matching the crowns of both sewers to the same elevation.

302.11 Ductile Iron Pipe

Ductile iron pipe shall be required for sanitary sewer mains:

1) Over or under all storm sewers
2) Crossing water mains
3) Under all stream crossings
4) With less than 3' of cover or over 18 feet of cover
5) With 20% or greater slope
6) Inside casings
7) At all other locations specified by Marietta Water

302.12 Sanitary Sewer Pipe Material Requirements

Marietta Water reserves the right to disallow any manufacturer that does not have a consistent, long-term record of quality control and successful product performance. Acceptable sanitary sewer pipe materials include Polyvinyl Chloride (PVC) or Ductile Iron Pipe (D.I.P.). Ductile Iron Pipe (D.I.P.) shall be used where certain conditions exist (see Section 302.11).

302.13 Subgrade and Pipe Bedding

All Ductile Iron Pipe shall have a minimum of Class "C" bedding. Wherever water or wet soil is encountered, Class "B" bedding shall be provided. All PVC pipe shall be bedded in accordance with Standard Detail 402-17. If specifically designated on the plans, Class "A" or "B" bedding may be required. Typically the manufacturer's recommendations shall govern the bedding requirements of the various pipes at the varying depths. However, Marietta Water reserves the right to increase the bedding requirements for any sewer main where Marietta Water believes the manufacturer's recommendations are not sufficient.

302.14 Manholes

Manholes shall be installed at the end of each line; all changes in grade, size, or alignment; at all intersections; and at distances not greater than 400 feet. In no circumstance will a spacing of greater than 300 feet be allowed when the slope exceeds 10 percent. Cleanouts may be used only for service laterals and special conditions and shall not be substituted for manholes. Manholes in cross-country areas shall be elevated so that the top is 18 inches above ground. Manholes located in paved areas shall be flush and even with the paved surface.

A drop pipe shall be provided for a sewer entering a manhole at an elevation of more than two feet above the manhole invert. Drop manholes shall be

constructed in accordance with the Standard Details. The drop pipe shall be of ductile iron materials with push-on joints with American "Fast-Grip" gaskets or approved equal gaskets. Also, at least one piece of ductile iron pipe shall be used on the incoming line to reach a solid, unexcavated foundation. All outside 90 degree elbows shall have thrust block poured below the elbow. Outside drop manholes will be noted on the construction plans. Where the difference in elevation between the incoming sanitary sewer and the manhole invert is less than two feet, the invert shall be sloped from invert to invert to prevent solids deposition.

The flow channel through manholes should be made to conform in shape and slope to that of the sewers. Minimum drop through a manhole should be 0.1 feet. Precast inverts shall not be used.

302.15 Protection of Water Supply

There shall be no physical connection between a public or private potable water supply system and a sanitary sewer which would permit the passage of any sewage or polluted water into the potable supply.

A horizontal separation of at least 10 feet is required between sanitary sewer lines and existing or proposed water mains (measured edge to edge). Should conditions prevent a separation of 10 feet, the lines shall be laid in separate trenches and sanitary sewers shall be ductile iron. Where sewer mains cross existing or proposed water lines, 18" vertical separation is required between the two mains (measured edge to edge).

Whenever possible, the elevation of the crown of the sewer shall be at least 18 inches below the invert of the water main. The two pipes shall be installed such that a full length of pipe will be centered over the crossing so that all joints will be separated as much as possible. Ductile iron pipe shall be installed for both mains at points where the two lines cross.
When sewers are laid within public streets, the manholes and lines shall normally be laid along the center of the street at a depth of not less than 7 feet below the road surface to the top of the pipe so that service laterals will have 6 feet of cover at the edge of the right-of-way. In curves and other areas where this is not possible, the lines and manholes are to be installed within the confines of the curb to avoid conflict with the curb and other utilities. Ductile iron pipe shall be used for sewer lines crossing storm sewers and at other locations specified by Marietta Water.

302.16 Service Laterals

The owner/developer shall install service laterals in residential subdivisions where a new main is installed. Marietta Water shall install all service laterals on existing mains. A separate sewer service shall be provided for every existing or proposed lot or building. A common service shall not be allowed for two or more buildings. For duplexes, two separate services shall be installed (one for each unit). All services shall be shown on the construction drawings. All service laterals shall be a minimum of 6" in diameter. The service shall extend to 5' inside the property line of the lot being served and normally be within 10 feet of the lower corner of the lot. The Contractor shall install a cleanout at the right-of-way and extend the PVC cleanout to a height of 3' above the finished grade with a water tight plug in all laterals until the builder ties into the line. The Contractor shall also place a 4" x 4" pre-treated wood post painted green above the end of the service lateral to enable the Builder to locate the service. The Developer shall be responsible for locating any unmarked services for the Builder. All service laterals shall have 6' of cover at the right-of-way. Where 6' of cover cannot be achieved, services shall be ductile iron.

6" services shall be laid at a minimum grade of 1%. Service laterals tied directly to manholes shall enter the manholes through cored holes and shall be provided with a pre-molded rubber boot as described in Section 303.04.1. Laterals shall enter the manhole no higher than 6" above the table and shall be provided with a concrete flume to slope the flow into the manhole invert. Where a lot elevation is lower than the manhole rim elevation the Contractor shall install a backflow check valve in the sewer lateral.

The developer shall be responsible for serving all lots developed. On any lot where the service cannot be found, the developer shall be responsible for payment of the cost of installation of another service lateral. Also, unless noted on the final plat, the service shall be low enough to serve the first floor elevation at the building line. The builder shall be responsible for the location of the services prior to the pouring of the foundation, driveway or other appurtenance. **Marietta Water will not be responsible for any house built too low to be served nor for any service covered by construction.**
No plumber or contractor will be allowed to connect to the sewerage system except to the end of the service provided for this connection, when proper permit is issued. After the service is run from the end of the lateral provided by the sewer line contractor to the house plumbing, the cleanout at the right-of-way may be cut down to be flush with the finished grade. The cleanout shall be provided with a concrete collar at finished grade.

302.17 Provisions for Future Extensions

In accordance with Section 302.07, sanitary sewers will be built to the uppermost property line of the development being served. In addition, a 20 foot sanitary sewer easement shall be provided. All of the 20 foot width must comply with the DNR stream buffer requirements. This easement must be shown and recorded on the final development plat and recorded at the Court House in the appropriate records section.

Sanitary sewer lines must end at a manhole. Stubbing out sewer lines for future extensions without placing a manhole at the end of the sewer line is not allowed.

302.18 Sanitary Sewer Line Extension Requirements

1) Developers are required to extend existing sanitary sewer lines to serve their property. These lines shall be extended along the entire property frontage and/or through the property to the upstream property line, per Section 302.17.

2) Sewer line extensions shall be sized in accordance with the requirements of Section 302.07. If the size of the trunk main extension required by Marietta Water is larger than the minimum size required to serve the development, the cost of the over sizing may be funded by Marietta Water. The developer may be required to pay all of the initial costs. Any Marietta Water funding will require Marietta Water approval.

302.19 Polyethylene Encasement

Where crossing a Gas Company easement or right-of-way, the sewer main shall be encased in green polyethylene tubing from beginning to end of the easement or R/W. Otherwise, the sewer main shall be encased in accordance with the Ductile Iron Pipe Research Association's (DIPRA) recommendations. The Developer shall submit a report prepared by DIPRA, detailing their recommendations regarding the pipe, cathodic protection, and polyethylene encasement, to Marietta Water for review.

302.20 Easements

1) Permanent sanitary sewer easements of 20 feet in width shall be provided for all sanitary sewer lines not located within the right-of-way. Permanent easements shall be reserved adjacent to the right-of-way for sewer lines located within 10 feet inside of the right-of-way, thereby giving Marietta Water

10 feet of accessible property on each side of the sewer line. If sanitary sewer lines are excessively deep, wider easements may be required to maintain a 1:1 open cut slope.

2) Easements for sanitary sewer lines and drainage purposes may be combined, but must be a minimum of 30 feet wide if designed for combination.

3) Sewer easements off the street right-of-way shall be clearly defined on the plat of the individual property owner.

4) All easements shall be cleared of debris, excess dirt and other materials. The ground shall be smoothed down and grassed within 10 days of completing construction work. The use of sediment control measures will be required to protect the area until a vegetative cover is obtained.

5) No permanent structures shall be constructed within a permanent easement. Permanent structures include buildings, mobile homes, swimming pools, and utility buildings. The property owner may be required to remove such obstructions, at his expense, upon the request of Marietta Water.

302.21 Aerial Crossings of Creeks and Ravines

Pipe used for aerial crossings shall be D.I.P. encased in steel casings. Steel casing shall be supported by piers built outside of the creek banks.

303. MATERIALS

All materials used in the work including equipment shall be new and unused materials of a reputable U.S. Manufacturer conforming to the applicable requirements of the Specifications, and no materials shall be used in the work until they have been approved by Marietta Water. Any reference to a AWWA, ANSI, ASTM or other such specification shall mean the latest revision published.

303.01 Sanitary Sewer Pipe

1) Ductile Iron Pipe (D.I.P.)

Ductile Iron Pipe shall be designed in accordance with AWWA C150. Minimum wall thickness shall be Class 50. Pipe shall be manufactured in accordance with AWWA C151. Wall thicknesses greater than the minimums called for above may be required due to greater depths or varying bedding requirements.

All D.I.P. shall be subject to inspection and approval by Marietta Water after delivery. No broken, cracked, imperfectly coated or otherwise damaged or unsatisfactory pipe or fittings shall be used. The exterior shall be seal coated with an approved bituminous seal coat in accordance with AWWA C151.

The interior lining of the pipe shall be a minimum thickness of 40 mils and shall be Protecto 401 ceramic epoxy, coal tar epoxy, polyurethane, Polybond II, or Polyline. **Both bare pipe and cement linings conforming to AWWA C104 are NOT allowed for any sanitary sewer pipe.**

Pipe joints shall be push-on joints conforming to AWWA C111, unless specified otherwise on plans. Where called for, mechanical joints shall conform to AWWA C111.

2) Polyvinyl Chloride (PVC) Sewer Pipe

a. Pipe and Fittings: All PVC pipe and fittings through 15" shall meet the requirements as specified under ASTM D3034. PVC pipe 18" in diameter shall meet the requirements of ASTM F679. All pipe and fittings shall be suitable for use as a sanitary sewer conduit. Bell joints shall consist of an integral wall section with elastomeric gasket joint which provides a water tight seal. Standard laying lengths shall be 13.0 - 20.0 feet (± 1 inch). The pipe shall be capable of passing all test which are detailed in this specification. Minimum wall thickness for pipe through 15" in diameter shall be as specified under SDR 35 in ASTM D3034. Minimum wall

thickness for 18" diameter pipe shall be as specified under T-1 in ASTM F679. PVC sewers with more than 12 feet of cover may require wall thicknesses greater than SDR 35 or T-1. PVC is not allowed for sewers greater than 18" in diameter or more than 18 feet of cover.

Each length of pipe shall be marked with the manufacturer's name, trade name, nominal size, class, hydrostatic test pressure, manufacturer's standard symbol to signify it was tested, and date of manufacture. Each rubber ring shall be marked with the manufacturer's identification, the size, the year of manufacture, and the classes of pipe with which it can be used.

All PVC fittings and accessories shall meet the requirements specified under ASTM D3034 or F679 and shall be manufactured and furnished by the pipe supplier. They shall have bell and/or spigot configurations compatible with that of the pipe and shall have an equivalent wall thickness.

b. Pipe and Fittings Tests: All shipments of pipe and/or fittings shall be tested and certified to by an approved independent testing laboratory. Up to 0.5 percent of the number of pipe of each size furnished shall be tested, except that in no case shall less than two specimens be tested. The contractor shall be responsible for providing three (3) certified copies of the test results obtained by the testing laboratory under provisions for testing in the applicable test procedures listed below. Testing shall be done at the contractor's expense, and no pipe shall be installed until the test results are approved by Marietta Water.

c. Pipe Stiffness: Minimum "pipe stiffness" (F/Y) at 5 percent deflection shall be 46 psi for all sizes, when tested in accordance with ASTM Standard Method of Test D2412, to determine the "External Loading Properties of Plastic Pipe by Parallel Plate Loading". There shall be no evidence of splitting, cracking, or breaking at a deflection of up to 30 percent of the original diameter.

d. Extrusion Quality: There shall be no evidence of flaking, swelling, of disintegration when the pipe material is tested in accordance with ASTM D2152, "Quality of Extruded Poly (Vinyl Chloride) Pipe and Molded Fittings by Acetone Immersion".

e. Joint Tightness: Pipe and fitting joints shall comply with ASTM D3212 for "Joints for Drain and Sewer Plastic Pipes Using Flexible Elastomeric Seals". Joint assembles shall not leak when subjected to both an internal

and external hydrostatic test at equivalent pressures of 10.8 psi gauge for a period of one hour. Pipes shall be tested in straight alignment, axially deflected position, and by shear load test as otherwise defined in paragraphs 7.2, 7.3, and 7.4 of ASTM D3212.

f. Impact Resistance: Pipe shall comply with impact resistance test conducted in accordance with ASTM D2444, "Test for Impact Resistance of Thermoplastic Pipe and Fittings by Means of a Tup (Falling Weight)."

g. Installation: PVC pipe will be installed in accordance with ASTM D2321 (Latest Revision). The minimum bedding requirement for PVC pipe shall be as shown in Detail 402.17. In any area where the pipe is below existing ground water level or below the 100 year flood plain level, the contractor will embed PVC pipe in sand or graded gravel.

h. Deflection Limit: Vertical deflection of installed pipe shall not exceed 5 percent of the undeflected diameter as defined in Table X1.1 of ASTM D3034.

Upon completion of the pipe laying, and at least 30 days after installation (to allow for settling), the pipe will be tested for final acceptance (subject to the one year maintenance period - Section 106). The test shall be performed by the Contractor pulling a mandrel of specified dimensions through the pipeline.

303.02 Casing Pipe

Steel casing pipe shall be schedule 40 thickness with a minimum yield strength of 35,000 psi and shall conform to the requirements of ASTM A139. It shall be fully coated on the exterior and interior with a bitumastic coating. The casing pipe diameter shall be six to eight inches greater than the "bell" diameter of the carrier pipe.

Wherever steel casing is required, the carrier pipe shall be ductile iron pipe with push-on joints. Approved spacers shall be used to secure the pipe on grade. A manhole shall be placed at each end of the cased section at a distance of 5 to 10 feet beyond the end of the casing. Ductile iron pipe shall be continuous from manhole to manhole.

303.03 Service Wyes and Bends

Wyes and bends shall be equal in quality to the materials of the pipeline being installed.

303.04 Manholes

1) Precast Manholes

Precast manholes shall be constructed of Portland Cement concrete with a compressive strength of not less than 4,000 pounds per square inch at an age of 28 days. The minimum inside diameter of the manhole shall be as required by Standard Detail No. 402.04. The wall thickness shall not be less than 5 inches. Manholes over 12' deep shall be placed on a reinforced slab as shown on the detail sheets. Joints in the wall shall be tongue and groove type; Sections shall be joined using O-ring rubber gaskets, flexible plastic gaskets conforming to the applicable provisions of ASTM Standard Specification, Serial Designation C443, or an approved bitumastic joint material. Precast concrete manholes shall consist of precast reinforced concrete sections with eccentric, (or flat slab for shallow manholes) top section and a base section conforming with the typical manhole details as shown on the Standard Detail. Flat top manholes will be approved only if a need for such can be demonstrated by the design professional.

Each section of the precast manhole shall have not more than two holes for the purpose of handling and laying. These holes shall be sealed with cement mortar using one part Portland Cement to two parts clean sand, meeting ASTM Standard Specifications, Serial Designation C144.

Holes in precast bases to receive sewer pipe shall be precast at the factory at the required locations and heights. Knocking out of holes in the field will not be permitted; However, holes can be cored in the field with a coring machine. The design, the materials used in, the manufacturing process and the transportation of precast manhole shall be subject to inspection at any time by Marietta Water. Materials found defective by Marietta Water will not be delivered to the job site. Material on the job site that is found defective shall be removed immediately after being notified that such materials are unacceptable. Precast manhole shall conform to ASTM C478.

Pre-molded rubber boots with stainless steel bands shall be used for connecting sewer pipe to manholes. These may be either the lock-in "Kor-N-Seal" type as manufactured by National Pollution Control Systems, Inc. or the

cast-in type as manufactured by Interpace Division of Ball Rubber, Inc. or approved equal. In all cases, the boot shall be sized to suit the outside diameter of the type pipe being used.

The invert of manholes shall be constructed of concrete or brick in accordance with the Standard Details and shall have a cross section of the exact shape of the invert of the sewer which it connects, changes in size and grade being made gradually and evenly. Changes in the direction of the sewer and entering branch or branches shall have a true curve of as large a radius as the size of the manhole will permit. Inverts shall have a "smooth trowel" finish. The manhole bench shall be sloped 30 degrees from the manhole wall toward the invert. Manholes shall be provided with steps built into the wall as shown on the detailed drawings. Drop manholes will be required where the invert of any incoming line will be higher than two feet from the invert of the outlet pipe. All manholes shall be water tight when completely built.

Safety platforms shall be constructed within the manhole in accordance with OSHA regulations and the details in these Standards.

2) Manhole Steps

Manhole steps shall be of #4 steel reinforcing bars covered with Polypropylene Plastic or rubber and shall be supplied with depth rings and other necessary appurtenances. The manhole steps shall conform to the applicable provisions of ASTM Specification C478, and shall be similar to and of equal quality to the "Sure Foot" by Oliver Tire and Rubber Company of Oakland, California or "PSI-PF" by M.A. Industries, Inc. of Peachtree City, Georgia. The step shall be factory built into the precast sections.

3) Manhole Cover and Frame

Manhole covers shall be cast iron with a coat of asphaltic paint applied at the foundry. The frame and cover shall be as shown on the detail drawings. All covers shall have "Sewer" printed on them. Manhole frame and covers shall be as manufactured by Neenah R-1765 (365 lbs.) in paved roads, parking lots and driveways, and Neenah R-1779 (300 lbs.) for non-traffic areas, or approved equal. Manhole frames shall be cast in the cone if located in non-traffic areas.

4) Waterproof Manhole Frame and Cover

Waterproof manhole covers shall be cast iron with a coat of asphaltic paint applied at the foundry as shown on the drawings with a "bolted-down" lid. All covers shall have "Sewer" printed on them. Manhole frame and covers shall be as manufactured by Neenah Foundry Company R-1915-F2 (435 lbs.) or approved equal. Manhole frames shall be cast in the cone if located in non-traffic areas.

5) Manhole Foundation

The manhole base shall be set on a compacted mat of Size #57 crushed stone graded level at the thickness shown on the standard detail drawings. In wet areas, the crushed stone mat shall be thickened as needed to provide a non-yielding foundation.

6) Brick

Brickwork required to complete the precast concrete manhole shall be constructed using 1 part portland cement to 2 parts clean sand, meeting ASTM Specifications, Serial Designation C 144, thoroughly mixed to a workable plastic mixture. Brickwork shall be constructed in a neat and workmanlike manner. Cement mortar shall be used to grout interior exposed brick joints and faces. No more than 4 courses of brick with 12 inch maximum total depth of bricks may be used to adjust manhole covers.

7) Doghouse Manhole

Materials required to construct a doghouse manhole are the same as those required for a standard manhole, except that the bottom precast section of the manhole shall come complete with manufacturer formed u-shape notches shaped and located to fit the existing sewer main. The section shall have a cored and booted opening set for the proposed pipe entering the manhole. The concrete base, footing and gravel foundation requirements are the same as are required for a standard manhole. The doghouse opening shall be carefully grouted with non-shrink cement. The top portion of the existing pipe within the doghouse manhole shall not be removed until authorized by the Marietta Water Inspector.

303.05 Concrete and Mortar

Concrete shall consist of Portland cement, a fine aggregate, a coarse aggregate and water. Portland cement shall conform to Fed. Spec. SS-C-19 lb. Fine aggregate shall be a clean, sharp, well-graded sand conforming to Fed. Spec. SS-S-51. Coarse aggregate shall be uniformly graded broken stone or gravel which will pass a 1-1/2 inch screen and be retained on a 1/4 inch screen. Aggregate shall be free of clay, loam silt, or organic matter. Water used for concrete shall be clean and free from vegetable, sewage or organic matter and the total amount used shall not exceed six (6) gallons per sack of cement. Forms may be of wood or metal properly braced to prevent bulging. Concrete shall be thoroughly mixed and well vibrated into forms and around fittings. Exposed surfaces of concrete shall be protected from premature drying by being kept covered and moist for a period of seven days. After the forms have been removed, the voids in the interior surface, if any, shall be properly filled with cement mortar and the whole surface rubbed uniformly with neat cement.

All mortar shall be composed of one part Portland cement to three parts sand, conforming to these specifications. All concrete shall have a compressive strength of not less than 3,000 pounds per square inch at an age of 28 days.

303.06 Reinforcing Steel

Bars for concrete reinforcement shall be of the sizes, lengths and bent as shown on plans. Bars shall be ASTM Specifications A-615 Grade 60. All steel shall be free from rust, scale or any foreign coating.

303.07 Brick

All brick shall be best grade, hard-burned, common, giving a ringing sound when struck and acceptable to Marietta Water. Only bricks presenting a regular and smooth face shall be used. When submerged in water for 24 hours, they shall not absorb more than 10% of their weight in water. Brick shall be culled when delivered on the ground, and all imperfect brick are to be immediately removed from the work. All salmon, soft or arch brick or brick made of alluvial soil will be rejected. All brick used in the work shall be of uniform size.

303.08 Subgrade Stabilizer Stone

Stabilizer for subgrade shall be either approved crushed stone or gravel, uniformly graded from 1/4" to 1-1/4" in size.

303.09 Polyethylene Tubing For Ductile Iron Pipe

Polyethylene tubing shall be manufactured of virgin polyethylene material conforming to ASTM Standard Specification D-1248-78, Type I, Class A or C, Grade E-1. The polyethylene film shall have a minimum thickness of 8 mm. Polywrap for sanitary sewers shall be green in color.

303.10 Casing Spacers

Approved casing spacers shall be used to secure the sewer line on grade throughout the length of the casing. The spacers shall be sufficient to secure the pipe on grade.

303.11 Concrete for Thrust Blocks and Thrust Collars

Concrete for thrust blocks and thrust collars shall have a minimum compressive strength of 3000 PSI at 28 days.

304. EXCAVATION AND CONSTRUCTION

304.01 General

1) It shall be expressly understood that these specifications are for installation of all sanitary sewer mains and appurtenances.
2) All work shall conform to the applicable provisions of specifications prepared by the AWWA, ANSI and ASTM of latest revision except as otherwise specified herein.
3) Compliance with applicable safety regulations is the responsibility of each company engaged in the work. Marietta Water assumes no responsibility for the actions of others on the job site. It is the responsibility of those installing sanitary sewer lines and appurtenances to conform to OSHA regulations.

304.02 Trench and Manhole Excavation

1) Sanitary sewer lines shall normally be installed by open-cut trench excavation. Pipe trenches shall be excavated straight and true to grade and line and in the location shown on the plans. Trenches shall be dug so that the pipe can be laid to the alignment and depth required, and the trench shall be of such width and shall be braced and drained so that the workmen may work therein safely and efficiently. No chocking under the pipe will be permitted. All joints shall be as specified herein. Excavation must be made under the bell of each pipe so that the entire length of the pipe will lie

uniformly on the bottom of the trench and the pipe weight shall not rest on the bells. Trenches shall be free of water during the work.

Trenches shall have a minimum width of twelve (12) inches plus the diameter of the outside of the bell of the sewer main and the maximum trench width at the centerline of the pipe shall not be more than the nominal diameter of the pipe plus two feet. In unpaved areas, the trenches may have a greater width than this, beginning at one foot above the top of the pipe and extending to the ground surface, if such width is necessary or desirable. However, in paved areas, the width of the trench from top to bottom shall not exceed the nominal diameter of the pipe plus two feet.

In cases where a sanitary sewer crosses a water main, there shall be a minimum vertical clearance of 18 inches separation between the mains. Both mains shall be D.I.P. At crossings, one full length of sewer pipe must be located so that both joints are as far from the water main as possible. In cases where sanitary sewer mains parallel water mains, there shall be a minimum of ten (10) feet horizontal separation maintained between the mains. These distances are measured edge to edge.
No excavation shall be made under highways, streets, alleys or private property until satisfactory arrangements have been made with the State, City, County or owners of the property to be crossed. All excavated material shall be placed so as to not interfere with public travel on the streets and highways along which the lines are laid. Not more than 100 feet of trench shall be opened on any line in advance of pipe laying.

When possible, all crossings of paved highways or driveways by pipe line shall be made by boring or jacking the pipe under the pavement and shall be done in such manner as not to damage the pavement or foundation, unless the casing or pipe is in solid rock, in which case the crossing shall be made by the open cut method or by tunneling.

Wherever streets, roads, or driveways are cut, they shall be immediately backfilled and compacted after the pipe is laid and shall be maintained in first-class condition as passable at all times until repaved.

Backfilling, compaction, dressing and clean-up shall be kept as close to the line laying crew as is practical, and negligence in this work will not be tolerated.

In excavation and backfilling and laying pipe, care must be taken not to remove or injure any water, sewer, gas or other pipes, conduits or other structures without an order from the Designer. When an obstruction is

encountered, the Contractor shall notify the Designer who will have the Owners of the obstruction adjust same or make necessary changes in grade and/or alignment to avoid such obstruction. Any house connection, drains or other structures damaged by the Contractor shall be repaired or replaced immediately.

All excavation shall be placed on one side of the trench, unless permission is given by Marietta Water to place it on both sides. Excavation materials shall be so placed as not to endanger the work and so that free access may be had at all times to all parts of the trench and to all fire hydrants or water valve boxes, etc. All shade trees, shrubs, etc., shall be protected.

The excavation for manholes shall extend to a firm, acceptable foundation and leave not less than 24 inches in the clear between their exterior surface and the embankment or timber that may be used to protect it.

The Contractor shall furnish, install and maintain such sheathing, bracing, etc., as may be required to support the sides of the excavation and to prevent any movement that might injure the pipe, or cause sloughing of the street or trench, or otherwise injure or delay the work or interfere with adjoining structures.

Construction occurring around active sanitary sewerage systems shall be done in such a way so as to prevent the spillage of sewage.

2) All materials shall be considered as rock which cannot be excavated except by drilling, blasting or wedging. It shall consist of undecomposed stone in solid layers or of boulders of not less than one-half cubic yard. Wherever rock is encountered in the excavation, it shall be removed by suitable means. If blasting is used for removal of rock, the contractor shall take all proper safety precautions. He shall comply with all rules and regulations for the protection of life and property that may be imposed by any public body having jurisdiction relative to the handling, storing and use of explosives. He is fully responsible for filing for and acquiring any blasting permits which may be required by those agencies with such jurisdiction. Before blasting, the Contractor shall cover the excavation with heavy timbers and mats in such a manner as to prevent damage to persons or the adjacent property. Rock excavation near existing pipelines or other structures shall be conducted with the utmost care to avoid damage. The Contractor shall be wholly responsible for any damage resulting from blasting, and any injury or damage to structures or property shall be promptly repaired by the Contractor to the satisfaction of Marietta Water and property owner.

3) Rock in trenches shall be excavated over the horizontal limits of excavation and to depths as follows:

Size of Pipeline Or Casing Inches	Depth of Excavation Below Bottom of Casing or Bottom of Pipe, Inches
4 to 6	6
8 to 18	8
18 to 30	10
Over 30	12

The undercut space shall then be brought up to grade by backfilling with subgrade stabilizer stone.

In rock excavation, the backfill from the bottom of the trench to one foot above the top of the pipe shall be finely pulverized soil, free from rocks and stones. The rest of the backfill shall not contain over 75% broken stone, and the maximum sized stone placed in the trench shall not weigh over 50 pounds. Excess rock and fragments of rock weighing more than 50 pounds shall be loaded and hauled to disposal. If it is necessary, in order to comply with these specifications, selected backfill shall be borrowed and hauled to the trenches in rock excavation.

Sides of the trench shall be trimmed of projecting rock that will interfere with backfilling operations. Rock excavation by blasting shall be at least 75 feet in advance of pipe laying.

304.03 Installation of Sanitary Sewer

Construction stake-out will be required prior to construction of sanitary sewer lines. As a minimum, the horizontal alignment will be staked at 100 foot intervals and each manhole will be located with a centerline stake and two offset hubs. "Cuts" to invert elevations will be shown for each manhole entry and exit pipe. A copy of the stake-out notes will be provided to Marietta Water.

Pipe and accessories shall at all times be handled with care to avoid damage. Whether moved by hand, skidways or hoists, material shall not be dropped or bumped. The interior of all pipe shall be kept free from dirt and foreign matter at all times. Each joint of pipe shall be unloaded opposite or near the place where it is to be laid in the trench. All such material that is defective in manufacture or has been damaged in transit or after delivery shall be removed from the job site.

All pipe and specials shall be of the dimensions and laid to the line and grade as

shown on the plans and as established by the design professional and as approved by Marietta Water. Wyes and/or service connections and stubs from manholes shall be placed where shown on plans and as approved by Marietta Water. All such connections shall be blanked off with suitable stopper and made watertight with jute and cement mortar.

The preferred order of construction is to connect to existing sanitary sewers after all other construction is complete and conditionally accepted by Marietta Water. Connections to existing sanitary sewers can be done at the beginning of construction, however, the new main shall be plugged where it enters either the existing manhole or the new doghouse manhole over an existing sanitary sewer, and the plug shall remain in place until the project is conditionally accepted.

Sanitary sewer pipes shall be joined by "push-on" joints using elastomeric gaskets to affect the pressure seal. The ends of pipe to be joined and the gaskets shall be cleaned immediately before assembly, and the assembly shall be made as recommended by the pipe manufacturer. Lubricant used must be non-toxic and supplied or approved for use by the pipe manufacturer. Sanitary sewer pipes shall be laid in the uphill direction with the bells pointing upgrade. Any variation from this procedure shall require approval from Marietta Water.

Bell holes shall be provided of sufficient size to allow ample room for making the pipe joints without putting any load on the bell of the pipe. The bottom of the trench between bell holes shall be carefully graded so that the pipe barrel will rest on a solid foundation for its entire length as shown on the plans. Pipe shall be laid with joints close and even, butting all around, so that it will form a close concentric joint with adjoining pipe with no sagging at the hub and so that a true surface is given to the invert throughout the entire length of the sewers. After the pipe is laid, backfilling shall be completed as directed in Section 304.07.

The contractor will be required to provide and operate any equipment necessary to keep the trenches free from water while pipe is being laid and the joints made. The installed pipe shall not be used for draining water from the ditch.

Pipe grades shall be obtained by use of a laser and double checked with a surveying level and rod.

Completed sewers shall be tested between manholes with lanterns or reflected light and shall show 100% of the full circle of the pipe from manhole to manhole without obstruction.

Sewers shall be laid tight and the rate of infiltration in any section of line between adjacent manholes shall not exceed 0 G.P.D. per inch diameter of pipe per mile

of line when the trenches are saturated with water.

ALL OPENINGS ALONG THE LINE OF THE SEWERS SHALL BE SECURELY CLOSED AT NIGHT, DURING SUSPENSION OF WORK, AND AT THE END OF EACH WORK PERIOD, WITH A WATER-TIGHT STOPPER.

NO LENGTH OF PIPE SHALL BE LAID UNTIL ONE PRECEDING IT SHALL HAVE SUFFICIENT QUANTITY OF FINE EARTH TAMPED AROUND IT TO HOLD IT FIRMLY IN PLACE.

304.04 Making of Joints

When joining gravity sewer pipe, both the spigot end and the bell end of the pipe shall be perfectly clean and free from dirt, oil, grease, or other foreign matter. The spigot end shall be lightly coated with the lubricant recommended and furnished by the manufacturer, and the pipe then shall be securely and firmly seated in the bell end of the adjoining pipe. In making the joint, the spigot end of the pipe, after being cleaned and coated with lubricant, shall not be allowed to touch the sides or bottom of the trench before being inserted in the bell end of the adjoining pipe. In addition to the above, joints shall be made in strict accordance with the specifications and recommendations of the manufacturer.

304.05 Subgrade and Pipe Bedding

All Ductile Iron pipe shall have a minimum of Class "C" bedding. All PVC pipe shall have a minimum bedding as described below and shown in the standard details (402.17). Wherever water or wet soil is encountered, Class "B" bedding shall be provided for D.I.P. If specifically designated on the plans, Class "A" or "B" bedding may be required. A description of Class "A", "B", and "C" bedding is as follows:

1) Class "A" Bedding (Detail 402.14)

   Class "A" bedding refers to bedding with concrete cradle, arch or encasement. The Contractor shall conform to details shown in the detailed drawings when Class "A" bedding is required.

2) Class "B" Bedding (Detail 402.15)

   The pipe shall be bedded in crushed granite material, conforming to Section 303.08, "Subgrade Stabilizer Stone", or other suitable materials approved by Marietta Water. The bedding shall be placed on a flat trench bottom with a

minimum thickness beneath the pipe of one-eighth the outside pipe diameter, but not less than 6 inches (150 mm) and sliced under the haunches of the pipe with a shovel or other suitable tool to height of one-half the outside pipe diameter, or to the horizontal centerline. The initial backfill shall be hand placed to a level of 12" (300 mm) over the top of the pipe and shall consist of finely divided materials free from debris, organic material, and large rocks or stones.

3) Class "C" Bedding (Detail 402.16)

The pipe shall be bedded in subgrade stabilizer stone placed on a flat trench bottom. The bedding material shall have a minimum thickness beneath the pipe of 6" (150 mm) or one-eighth of the outside diameter of the pipe, whichever is greater and sliced under the haunches of the pipe with a shovel or other suitable tool to a height of one-sixth of the outside diameter of the pipe. The initial backfill shall be hand placed to a level of 12" (300 mm) over the top of the pipe and shall consist of finely divided materials free from debris, organic material, and large rocks or stones. Bedding materials shall be as described in Section 303.08, "Subgrade Stabilizer Stone".

4) Special Bedding for PVC Pipe (Detail 402.17)

PVC pipe shall be bedded in crushed granite material, conforming to Section 303.08, "Subgrade Stabilizer Stone", or other suitable materials approved by Marietta Water. The bedding shall be placed on a flat trench bottom with a minimum thickness beneath the pipe of one-fourth the outside pipe diameter, but not less than 6 inches (150 mm) and sliced under the haunches of the pipe with a shovel or other suitable tool to height of two-thirds the outside pipe diameter. The initial backfill shall be hand placed to a level of 12" (300 mm) over the top of the pipe and shall consist of finely divided materials free from debris, organic material, and large rocks or stones.

304.06 <u>Dewatering Trenches</u>

The Contractor shall do all necessary pumping or bailing, build all drains and do all other work necessary at his own expense to keep the trenches clear of water during the progress of the work. No structure shall be built or pipe shall be laid in water, and water shall not be allowed to flow over or rise upon any concrete, masonry or pipe until the same has been inspected and the concrete or joint material has thoroughly set. All water pumped, bailed or otherwise removed from the trench or other excavation shall be conveyed in a proper manner to a suitable place of discharge where it will not cause injury to the public health or to public or private property or to work completed or in

progress, or to the surface of the streets or cause any interference with the use of same by the public. All soil and erosion control standards must be followed during dewatering operations. Best management practices must be used.

304.07 Backfilling

1) After the pipe has been laid, backfilling shall be done in two (2) distinct operations. In general, all backfill beneath, around and to a depth of twelve (12") inches above the top of the pipe shall be placed by hand in four (4") inch layers for the full width of the trench and thoroughly compacted by hand with vibratory equipment. The remainder of the backfill shall be placed in 6" layers and compacted to the top of the trench, either by pneumatic hand tamps, hydro-tamps, or other approved methods. Care shall be taken so that the pipe is not laterally displaced during backfilling operations. The backfill lifts shall be placed by an approved method in accordance with that hereinafter specified. Backfill materials shall be the excavated materials without bricks, stone, foreign matter or corrosive materials, where not otherwise specified or indicated on the plans.

2) Backfill under permanent concrete or bituminous pavement and as elsewhere specified or indicated on the plans shall be approved bank-run sand or gravel or crushed stone free from large stones and containing not more than ten percent (10%) by weight of loam or clay. This backfill shall be compacted to one hundred percent (100%) as determined by the Standard Proctor test for the top two (2) feet of trench and ninety-five percent (95%) by the Standard Proctor test from pipe bedding to two (2) feet below trench top. Mechanical vibrating equipment shall be used to achieve the required compaction. Pavement shall be replaced immediately after the backfilling is completed.

3) Backfill under gravel or crushed stone surfaced roadways shall be the approved suitable excavated material placed in six (6) inch layers thoroughly compacted for the full depth and width of the trench, conforming to the compaction, density compaction method and materials as specified in "2" above.

4) Backfill in unpaved areas shall be compacted with mechanical vibrating equipment to ninety-five percent (95%) as determined by the Standard Proctor Test. Backfill material from pipe bedding to ground surface by shall be excavated earth free from large stones and other debris.

5) Contractor shall fully restore and replace all pavement, sidewalks, landscapes, surface structures, etc., removed or disturbed as part of the work to a condition equal to or better than before the work began to the satisfaction of Marietta Water.

6) Where sheeting is used in connection with the work, it is in no case to be withdrawn before the trench is sufficiently filled to prevent damage to banks, road surfaces, adjacent pipes, adjacent structures or adjacent property, public or private.

304.08 Stream Crossings

The preferred method of crossing a river, stream, creek, impoundments, or wet weather ditch is with a minimum of two feet of cover between the lowest point in the stream and the top of outside diameter of the pipe. Ductile iron pipe is required for all stream crossings and shall extend a minimum of ten feet (10') beyond the top of bank on each side. Precast concrete collars may be required to prevent flotation.

The stream bed and banks at the crossing site shall be protected from erosion with the use of rip-rap, as defined and sized in the **Manual For Erosion and Sediment Control In Georgia**, Appendix C - Construction Materials, 1997 or most current edition.

Aerial crossings will require detailed plans and will be allowed only when, in Marietta Water's opinion, there is no reasonable alternative.

Erosion control measures shall be installed prior to installing pipe across any stream. All work should be performed when stream flows are at their lowest, and all work should be performed as quickly and safely as possible. As soon as conditions permit, the stream bed shall be cleared of all falsework, debris, and other obstructions placed therein or caused by the construction operations.

Erosion control measures can include, but is not limited to, the following items:

a. Silt fencing, types A, B, and/or C
b. Erosion control checkdams
c. Channel diversion through temporary storm drain pipe.
d. Rock filter dams

The construction and installation of these various structures are detailed in the **Manual For Erosion And Sedimentation Control In Georgia** or the Georgia

Department of Transportation Standards and Construction Details, both of which are available for purchase by the Contractor.

304.09 Casing for Sanitary Sewers

Where pipe is required to be installed under railroads, highways, streets or other facilities by jacking or boring methods, construction shall be done in a manner that will not interfere with the operation of the utility, and shall not weaken the roadbed or structure.

Casing pipe shall be installed at the locations shown on the plans. Unless directed otherwise, the installation procedure shall be the dry bore method. The hole is to be mechanically bored and cased through the soil by a cutting head on a continuous auger mounted inside the casing pipe. The installation of the casing and boring of the hole shall be done simultaneously by jacking. The diameter of the bore shall conform to the outside diameter and circumference of the casing pipe as closely as practicable. Any voids which develop during the installation operation shall be pressure grouted. Each segment of the casing pipe shall be welded (full circumference butt weld) to the adjoining segment. The completed casing shall have no sags or crowns which cause the grade for any segment to be less than the minimum slope for the size pipe being installed.

Excavation material will be removed and placed at the top of the working pit. Backfill material and methods of backfilling and tamping shall be as required under Section 304.07. Carrier pipe shall be D.I.P. and shall be inserted within the casing by use of approved casing spacers.

At each end of the casing pipe, the void between the carrier pipe and casing shall be sealed with brick and mortar.

304.10 Bracing, Sheeting, and/or Shoring

Whenever the condition of the ground is such that it is necessary to protect the work, the street, the roadway or the workmen, the sides of the trench shall be supported with suitable bracing, sheeting and/or shoring to be furnished by the Contractor at his own expense.

304.11 Location and Protection of Existing Underground Utilities

It is the responsibility of the Contractor to locate the underground utilities and to protect same. Utility lines or services damaged by the Contractor shall be repaired by the Contractor at his own expense.

304.12 Connection to the Existing Marietta Water Sanitary Sewer System

1) The Developer's private Contractor shall make all required connections to Marietta Water's sewer system for line extensions beginning at the existing sewer line. Marietta Water's Inspector will supervise the connection and all associated work. All other types of connections shall be made by Marietta Water.
2) The Contractor shall give Marietta Water a minimum of 48 hours notice prior to any sewer system work.
3) The Contractor will provide proper traffic control devices and certified personnel to direct traffic if required.
4) All connections to existing manholes shall be properly cored with a coring machine; "Knocking-out" of a hole in the manhole for a connection is not permitted.
5) The timing of the Developer's connection to Marietta Water's system shall be pre-arranged with Marietta Water.

304.13 Street Cuts

1) All paved roads will be bored and cased. A bore must be attempted before consideration will be given to cutting the street.
2) Existing roadways shall not be open cut unless permission is granted by the Georgia D.O.T., Marietta Public Works Department, or Cobb County D.O.T. Submittal of an authorization letter from the appropriate governing agency is required.
3) One lane of traffic shall be maintained open at all times. Construction work shall be limited to time between 9 A.M. and 4 P.M.
4) The Contractor shall furnish traffic control devices and certified personnel to direct traffic, if required.
5) The above requirements may be altered with the written approval of Marietta Water in extenuating circumstances.
6) Assuming that a road bore has been attempted and failed, and that the Developer has received permission to open cut a road, pavement replacement shall adhere to the following guidelines:

    a. Removing and replacing pavement shall consist of removing the type of pavement and base encountered, and replacing same to its original shape, appearance and riding quality, in accordance with the detailed plans. Where possible, all pipe under existing paved driveways will be either free bored or installed in casing. Free bores under driveways will be made with D.I.P. Casing will be required where the installation is under any roadway. Carrier pipe shall be D.I.P.
    b. Concrete pavement shall be replaced with pavement of a thickness equal

to that removed, or 6" for driveways and 8" for roads, whichever is thicker. The concrete shall meet the specifications of the D.O.T. for concrete paving.

c. Where bitumastic paving is replaced, a base course of 3000 psi concrete shall be placed over the ditch line. The concrete shall be 6" thick for driveways and parking lots and 8" thick for public roads. The top of this base course shall be left with a rough float finish 1-1/2" below the surface of the existing paving. After the concrete has attained its strength, a tack coat of AC-15 or equal shall be applied at the rate of 0.25 gallons per square yard, and a plant mix surface course applied over this, and finished off level with existing pavement.

d. Unless otherwise directed in writing, all pavement shall be removed to a width of the trench plus 12" on each side as shown on the detailed drawings. Under normal circumstances, the maximum allowable trench width shall be the nominal diameter of the pipe plus 24 inches.

304.14 Standard Detailed Drawings

Installation of sewer mains, service laterals, manholes, casings, cleanouts, etc. shall be made in accordance with the Standard Detailed Drawings in these specifications.

304.15 Clean-Up

1) The Contractor shall remove all unused material, excess rock and earth, and all other debris from the construction site as closely behind the work as practical. If the contractor fails to maintain clean-up responsibilities as directed by Marietta Water's representative, Marietta Water may choose to use their own forces to do so, followed by an invoice to the Developer for Marietta Water's work. All trenches shall be backfilled and tamped before the end of each days work.

2) Prior to requesting the final inspection, the Contractor shall do the following:

a. Remove and dispose of in an acceptable manner all shipping timbers, shipping bands, excess materials, broken material, crates, boxes and any other material brought to the job site.

b. Repair or replace any work damaged by the sewer line construction.

c. Regrade and smooth all shoulder areas disturbed by the sewer line construction.

d. All easement areas shall be cleared of trees, stumps and other debris and left in a condition such that the easement can be maintained by bush-hog equipment.

e. All shoulders, ditches, culverts, and other areas impacted by the sanitary

sewer construction shall be at the proper grades and smooth in appearance.

f. All manhole covers shall be brought to grade.

g. A uniform stand of grass or mulch for erosion protection, as defined in the **Manual For Erosion and Sediment Control In Georgia**, is required over all construction easements and sanitary sewer easements prior to Marietta Water's acceptance of the sanitary sewer.

h. If work is performed on a Georgia D.O.T., City of Marietta, or Cobb County right-of-way, a letter from the governing agency is required to be submitted after construction is complete stating that grassing, clean-up, drainage, etc. is acceptable.

i. Outfall sewers shall require Army COE Post-Construction Notification if Pre-Construction Notification was obtained for Wetlands Nationwide Permit.

304.16 Barricades

The Contractor shall provide, erect and maintain all necessary barricades, suitable and sufficient red lights, danger signals and necessary precautions for the protection of the work and the safety of the public. Street closures must be approved by Marietta Public Works. Streets closed to traffic shall be protected by effective barricades on which shall be placed acceptable warning signs. Barricades shall extend completely across the street which is to be closed, and shall be illuminated at night by lights not farther than (5) feet apart, and lights shall be kept burning from sunset to sunrise.

304.17 Grassing

All areas outside structures and along pipelines where the earth is disturbed shall be grassed. After the soil has been properly prepared, the seed shall be planted. After the seeds have been planted, the moisture content of the soil shall be maintained at the optimum amount to insure germination of the seed and growth of the grass.

Immediately after the initial watering of seeded areas, the contractor shall apply a mat of hay or rye, wheat or oat straw over the area at a uniform rate of not less than 1-1/2 ton of mat to the acre. The minimum depth of the straw shall be 2 inches and the maximum depth 3 inches. After placing mat or hay or straw, emulsified asphalt shall be sprayed over the mat at a uniform rate of 0.15 gallon per square yard. After the grass has shown a satisfactory growth (approximately 30 days after planting), nitrate of soda shall be applied at a uniform rate of 100 pounds per acre, followed by sufficient water to dissolve the fertilizer.
The Contractor shall do all maintenance work necessary to keep all planted

areas in satisfactory condition until the work is finally accepted. This shall include mowing, repairing washes that occur, reseeding, and water as required to produce a healthy and growing stand of grass. Mowing will be required to remove tall and obnoxious weeds before they go to seed.

It is the intent of these specifications to produce a stand of grass that is alive and growing, without any bare spots larger than one square foot. The Contractor shall repeat all work, including plowing, fertilizing, watering, and seeding as necessary to produce a satisfactory stand.

305. INSPECTION AND TESTS

305.01 General

1) All lines designed to operate as gravity sanitary sewers and all force mains shall be successfully tested. Tests of installed piping shall be completed as described below.

2) All piping to be tested must satisfactorily comply with these tests before being eligible for acceptance.

3) These tests must be performed in the presence of Marietta Water's Inspector in order for the test to be accepted as valid.

305.02 Concealed Work

The Marietta Water inspector may direct that the contractor notify Marietta Water and receive inspection approval prior to concealing certain work such as manhole foundations, pipe bedding, wyes, bends, service laterals, or other appurtenances.

305.03 Minimum Tests

All new gravity sewer lines constructed will be tested for infiltration, exfiltration, and deflection. Flexible pipe sewers (PVC) shall be subjected to the Mandrel Test. The Developer will be responsible for coordinating a CCTV inspection of the sewer main with Marietta Water. Slopes of sewer mains that are close to minimum grade will be checked to ensure cleansing velocity. Marietta Water may require manholes to be subjected to a vacuum test to check potential infiltration. The backfill in the trench above the pipeline will be subjected to compaction tests as detailed below. Any defects located during testing must be corrected before construction of the project may proceed. All costs associated with testing will be paid by the Developer. Tests will be performed as follows:

1) Measurement of Infiltration

In no case will an infiltration rate greater than 0 GPD per inch diameter per mile of pipe be allowed. Any visible or audible leak must be dug up and repaired. Any increase in flow between two adjacent manholes must be corrected.

2) Exfiltration Test (Low Air Pressure Test)

After completing backfill of a gravity sewer line section, conduct a low pressure air test of all pipe constructed, using methods and devices acceptable to Marietta Water. Perform such test using the following general procedures:

a. Temporarily plug line segment between two manholes using plugs having air tight fittings through which low pressure air can be introduced into the pipe segment being tested.
b. Introduce low pressure air into the test pipe segment until the internal air pressure reaches 4.5 psig above ground water pressure, if any.
c. Wait at least two minutes for air temperature in the test segment to stabilize while internal air pressure remains no less than 3.5 psig above ground water pressure.

d. Bleed internal air pressure to exactly 3.5 psig above ground water pressure.
e. Accurately determine the elapsed time for internal pressure to drop to 2.5 psig above ground water pressure.
f. The air test is acceptable if elapsed time is no less than shown by the following table:

Pipe Dia. Inches	Seconds Per 100 Ft. of Pipe	Pipe Dia. Inches	Seconds Per 100 Ft. of Pipe
6	17	30	85
8	23	36	102
10	28	42	119
12	34	48	136
15	43	54	153
18	51	60	170
21	60	66	187
24	68	72	204

Air leakage time is based on pipe being damp. If pipe and joints are dry, dampen line if helpful in meeting air test time requirement.

Permanently correct leakage determined by air testing, and repeat operations until the inspector witnesses a successful test on each line segment.

3) Deflection Test

Every section of sewer line will be visually checked for deflection. A passing section shall show 100% of a full circle when observed from one end. This may be done using mirrors to reflect sun light or by using lamps. Any section which fails this visual test shall be further checked as follows:

The section shall have water run through it sufficient to fill any sags that may exist. Then it shall have a television camera pulled through it to check for sags. Any sag holding more than one inch of water will require that the pipe be removed and replaced to proper grade after which the section shall be televised again to verify correction.

4) Mandrel Test for Flexible Pipe (PVC)

All PVC gravity sewer mains shall be subjected to the Mandrel Test. The procedure for testing flexible pipe for maximum allowable deflection shall be generally as follows. See ASTM specifications for mandrel dimensions and more details.

a. Completely flush the line making sure the pipe is clean of any mud or trash that would hinder the passage of the mandrel.
b. During the final flushing of the line, attach a floating block or ball to the end of the mandrel pull rope and float the rope through the line. (A nylon ski rope is recommended).
c. After the rope is threaded through the line, connect the pull rope to the mandrel and place the mandrel in the entrance of the pipe.
d. Connect a second rope to the back of the mandrel. This will enable the mandrel to be retrieved if excessive deflection is encountered.
e. Draw the mandrel through the sanitary sewer line.
f. An increasing resistance to pull is an indication of excessive deflection. If this occurs mark the rope to note the location. Televise the sanitary sewer section to identify the extent of the problem and develop a plan, subject to Marietta Water approval, for correcting the problem.
g. Retest after correcting the problem.

5) T. V. Inspection

All sewer lines shall be televised and a film of the inspection made before the final plat is signed and again before the final acceptance of the sewer lines.

Prior to televising the mains, the mains shall be flushed with water so that sags are apparent. The Developer shall be responsible for coordinating the CCTV inspection with Marietta Water. Any faulty pipe noted such as sagged pipes, broken pipes, bad joints, etc., will be dug up and will be corrected. Internal grouting to repair new lines will not be allowed. After correction of the discrepancies, the line will be re-televised.

6) Cleansing Velocity / Slope Test

The Inspector shall work with the Contractor to survey the inverts to check the grade of the sewer mains. If the sewer main has been installed flatter than the minimum grade required to provide cleansing velocity, the line shall be dug up and reinstalled at the proper grade.

7) Manhole Construction

Every manhole will be visually inspected to check for plugging of lift holes, use of connecting boots, use of joint material, leakage, proper invert construction, proper setting of frame and cover. Vacuum testing of the manhole structure will be required at Marietta Water's discretion.

8) Compaction Testing

Compaction testing will be required for sanitary sewers constructed in paved areas or where pavement is planned. A minimum of five tests per 1,000 feet of sanitary sewer will be conducted at varying depths.

Marietta Water may require additional compaction tests be conducted in any other areas where Marietta Water's Inspector suspects the backfill has not been compacted in accordance with Section 304.07 of these specifications. If any of these tests show failing results, then the failing backfill will be removed, re-compacted and re-tested, and one additional area will be tested as well.

Compaction tests shall be conducted by an independent laboratory at the Developer's expense.

305.04 Timing of Service Connections

In no circumstances shall any homes, buildings or plumbing fixtures be connected to the sanitary sewers until the sewers have been inspected and approved by Marietta Water

306. PRE-TREATMENT REQUIREMENTS FOR INDUSTRIAL WASTEWATER

Some industrial and other developments may be required to pre-treat sewage prior to discharge into Marietta Water's collection system. Requirements for pre-treatment shall be as specified or amended in the Cobb County Wastewater Ordinance.

307. OTHER REQUIREMENTS

No part of these specifications is intended to relieve the developer of his responsibility to comply with requirements of the Georgia D.O.T., the Georgia DNR, the NRCS, the USACOE, the EPA, the EPD, Cobb County, City of Marietta or other appropriate regulatory agency.

Section 400

Standard Details

October 2012

S:\MARIETTABLW\BLW DETAILS 2010\401-01.C

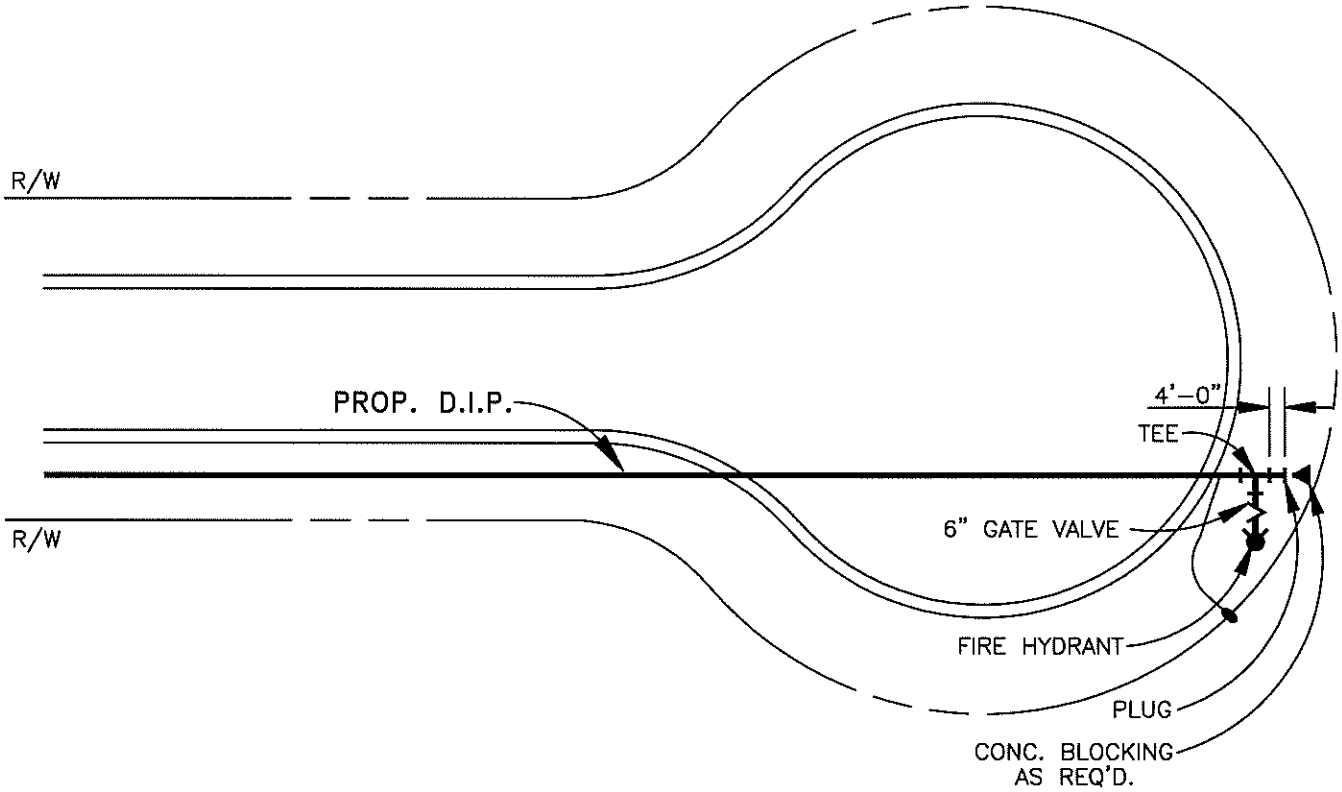

TYPICAL WATER MAIN AT CUL-DE-SAC

NOTE:
NO WATER SERVICE TAPS SHALL BE ALLOWED ON THE DOWNSTREAM SIDE OF THE FIRE HYDRANT (BETWEEN THE HYDRANT AND THE PLUG).

PLOTTED: APRIL 27, 2010

Marietta WATER	TYPICAL WATER MAIN AT CUL-DE-SAC	Standard No. 401-01

ACCEPTABLE FIRE HYDRANTS:

1. EAST JORDAN IRON WORKS WATERMASTER 5CD250,
2. M&H TRAFFIC MODEL STYLE 129,
3. MUELLER SUPER CENTURION 250 MODEL A423

HYDRANTS SHALL BE RATED FOR 250 PSI AND SHALL BE FITTED WITH A 5 1/4" VALVE OPENING.

PAINT:
COLOR-SILVER REFLECTIVE OUTDOOR RATED EPOXY

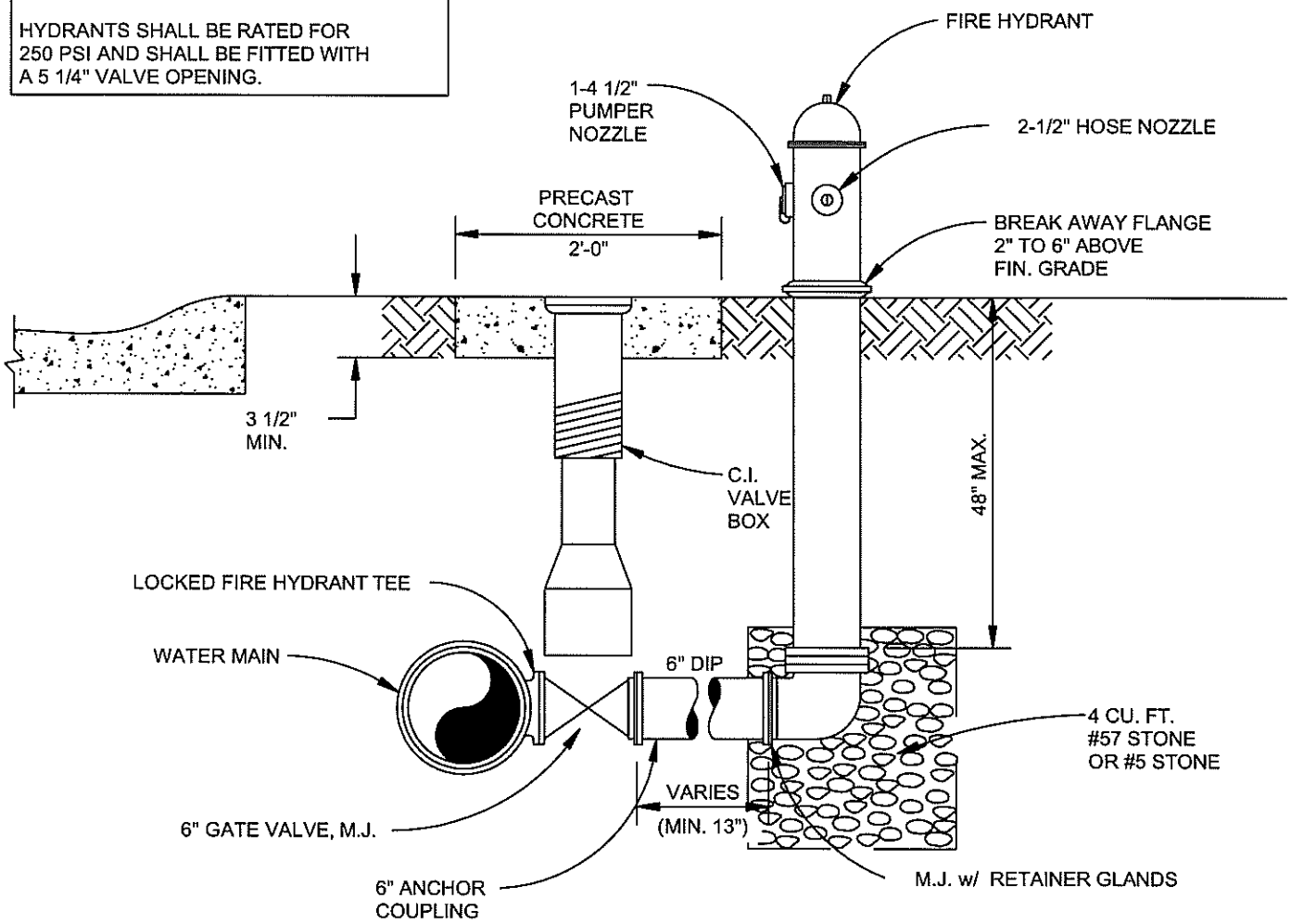

NOTES:

1. 4 1/2" PUMPER NOZZLE TO FACE STREET
2. HYDRANT NOT TO BE SET ON STREET SIDE OF WATER MAIN
3. VALVE BOX TO BE ADJUSTED TO GRADE
4. CONCRETE COLLAR AROUND VALVE BOX IF NOT IN PAVED AREA
5. GRAVEL TO BE PLACED AROUND HYDRANT DRAIN, MINIMUM DIMENSIONS 20" x 20" x 20"

TYPICAL FIRE HYDRANT INSTALLATION

Marietta WATER	TYPICAL FIRE HYDRANT INSTALLATION	Standard No. 401-02

S:\MARIETTA\BLW\BLW DETAILS 2010\401-02.DWG
PLOTTED: APRIL 27, 2010

S:\MARIETTABLW\BLW DETAILS 2010\401-03.D

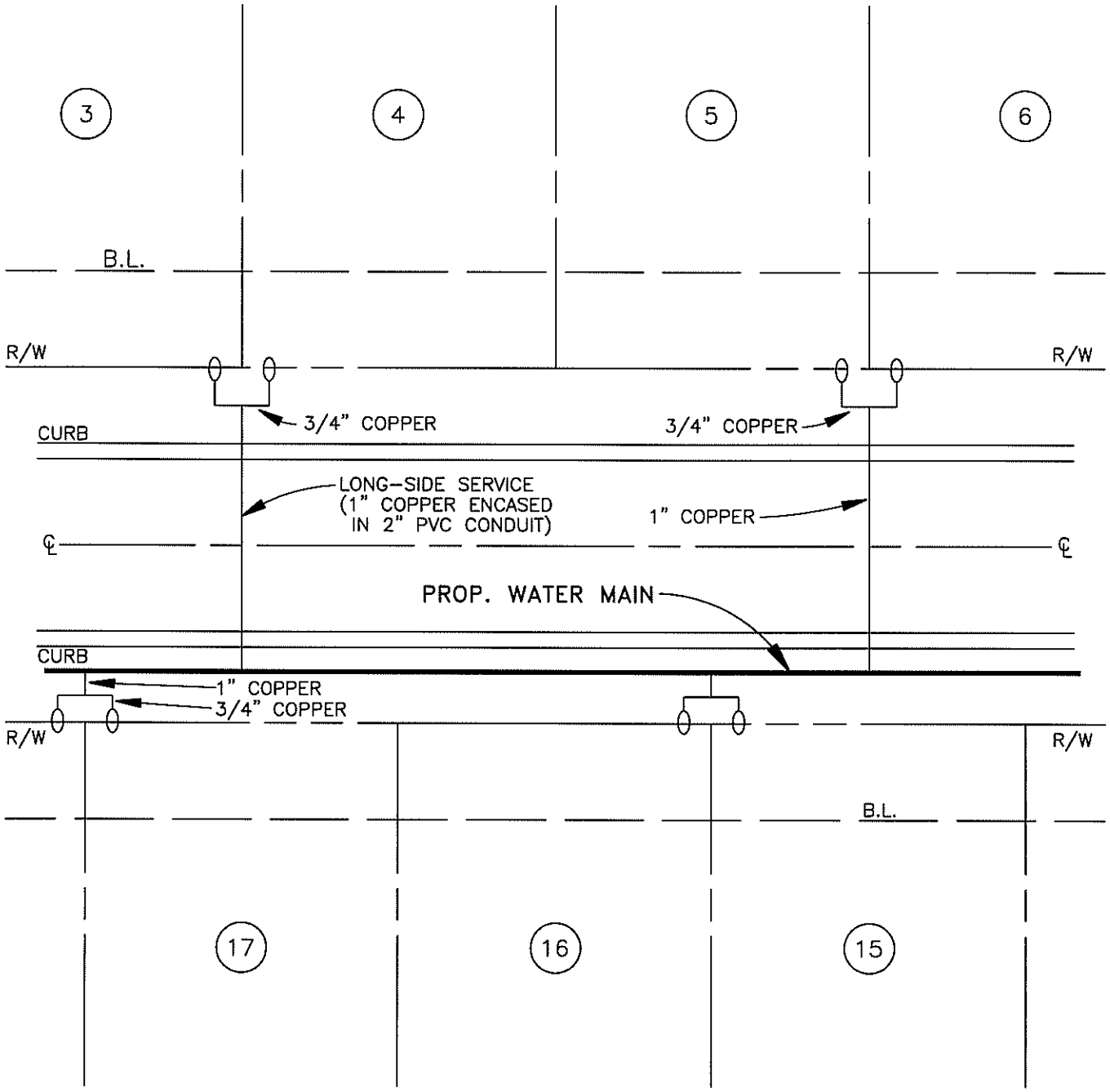

3/4" WATER METER LOCATION (FOR SUBDIVISION)

PLOTTED: APRIL 27, 2010

Marietta WATER	3/4" WATER METER LOCATION (FOR SUBDIVISIONS)	Standard No. 401-03

NOTES:

1. IN A TYPICAL RESIDENTIAL SUBDIVISION, THE METER WILL BE A 3/4" METER WITH THE BACKFLOW PREVENTER BUILT INTO THE METER. SERVICE LINES TO THE METER WILL BE 1" IN DIAMETER FROM THE MAIN TO THE CURB STOP.
2. 3/4" METERS REQUIRE 1" DIAMETER COPPER FROM WATER MAIN TO THE WYE AND 3/4" DIAMETER COPPER FROM THE WYE TO THE METER.
3. 1" METERS REQUIRE 2" DIAMETER COPPER FROM WATER MAIN TO THE WYE AND 1" DIAMETER COPPER FROM THE WYE TO THE METER.

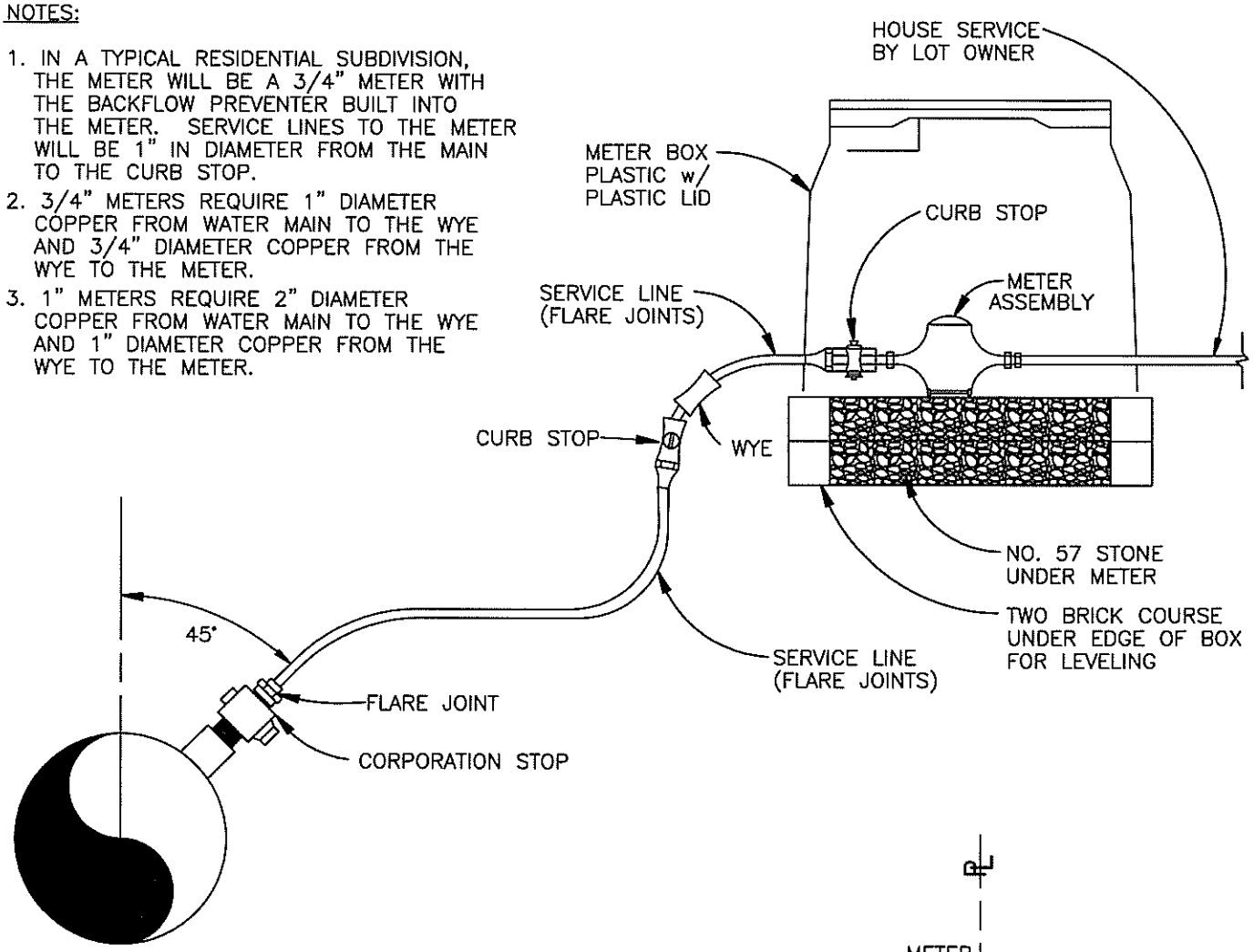

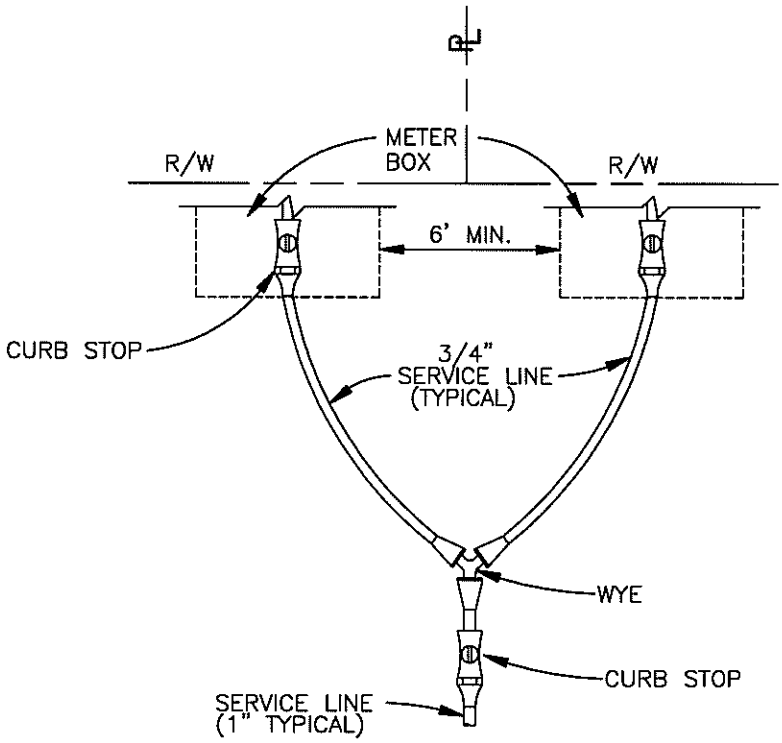

PLAN

NOTE:

NO POWER TRANSFORMER OR POWER POLE SHALL BE LOCATED ON THE SAME LOT CORNER AS A WATER SERVICE.

Marietta WATER

SUBDIVISION WATER METER LOCATION

Standard No. 401-04

S:\MARIETTABLW\BLW DETAILS 2010\401-04.D
PLOTTED: APRIL 27, 2010

S:\MARIETTA\BLW\BLW DETAILS 2010\401-05.0.DWG

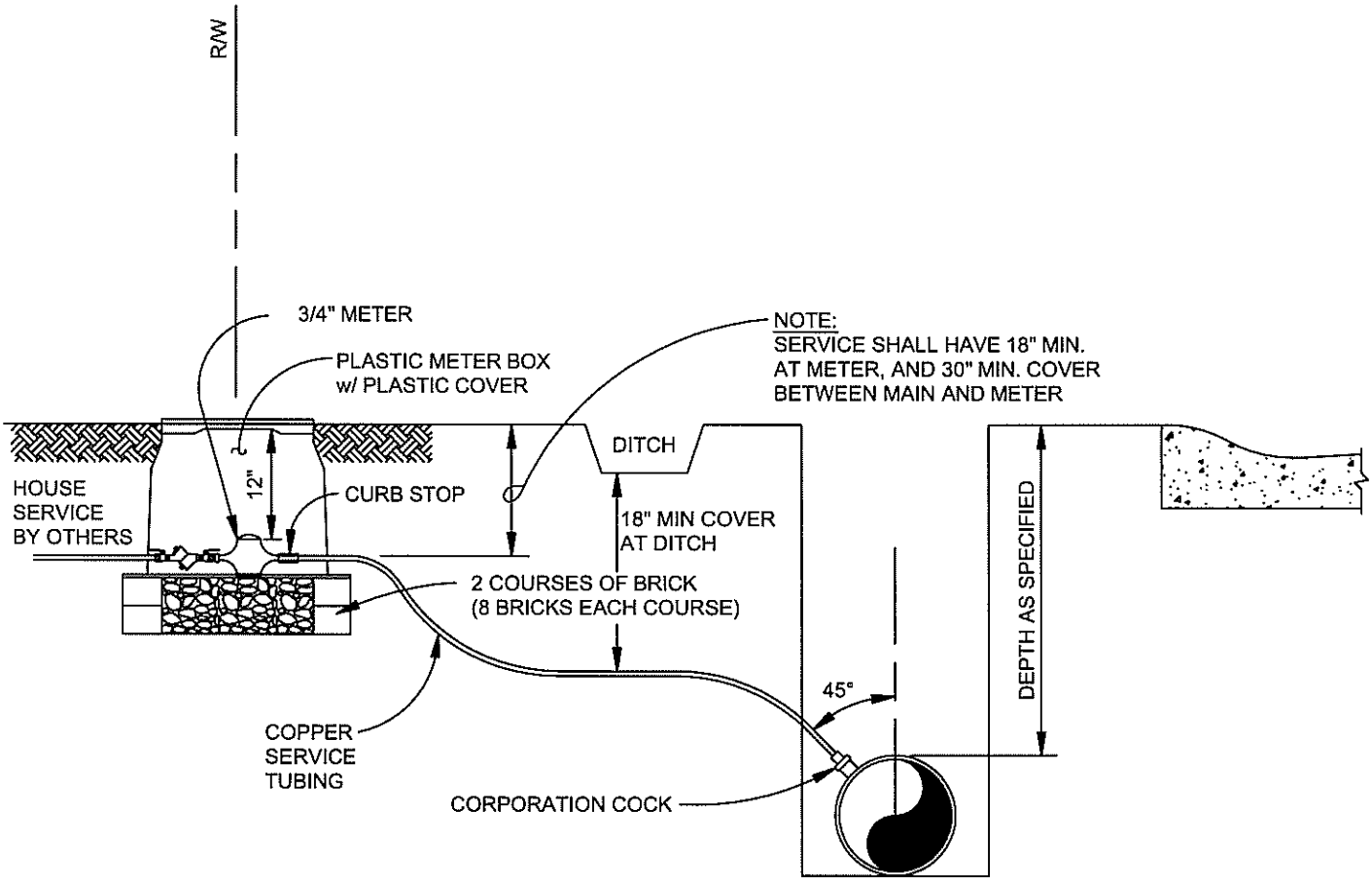

NOTES:

1. SERVICE LINE SHALL BE 3/4" FROM MAIN TO METER.
2. USE ALL FLARE JOINTS
3. INSTALLATION SHALL ALLOW ADEQUATE ROOM TO REMOVE AND/OR REPAIR METER.
4. 3/4" METERS SHALL HAVE A BACKFLOW PREVENTER BUILT INTO THE METER.
5. METER BOX SHALL BE APPROXIMATELY 18" X 24".
6. THIS DETAIL AUTHORIZED FOR USE FOR INSTALLATION OF 3/4" IRRIGATION METERS.

3/4" METER INSTALLATION

PLOTTED: APRIL 27, 2010

Marietta WATER

3/4" METER INSTALLATION

Standard No.

401-05.0

S:\MARIETTA\BLW\BLW DETAILS 2010\401-05.1.DWG

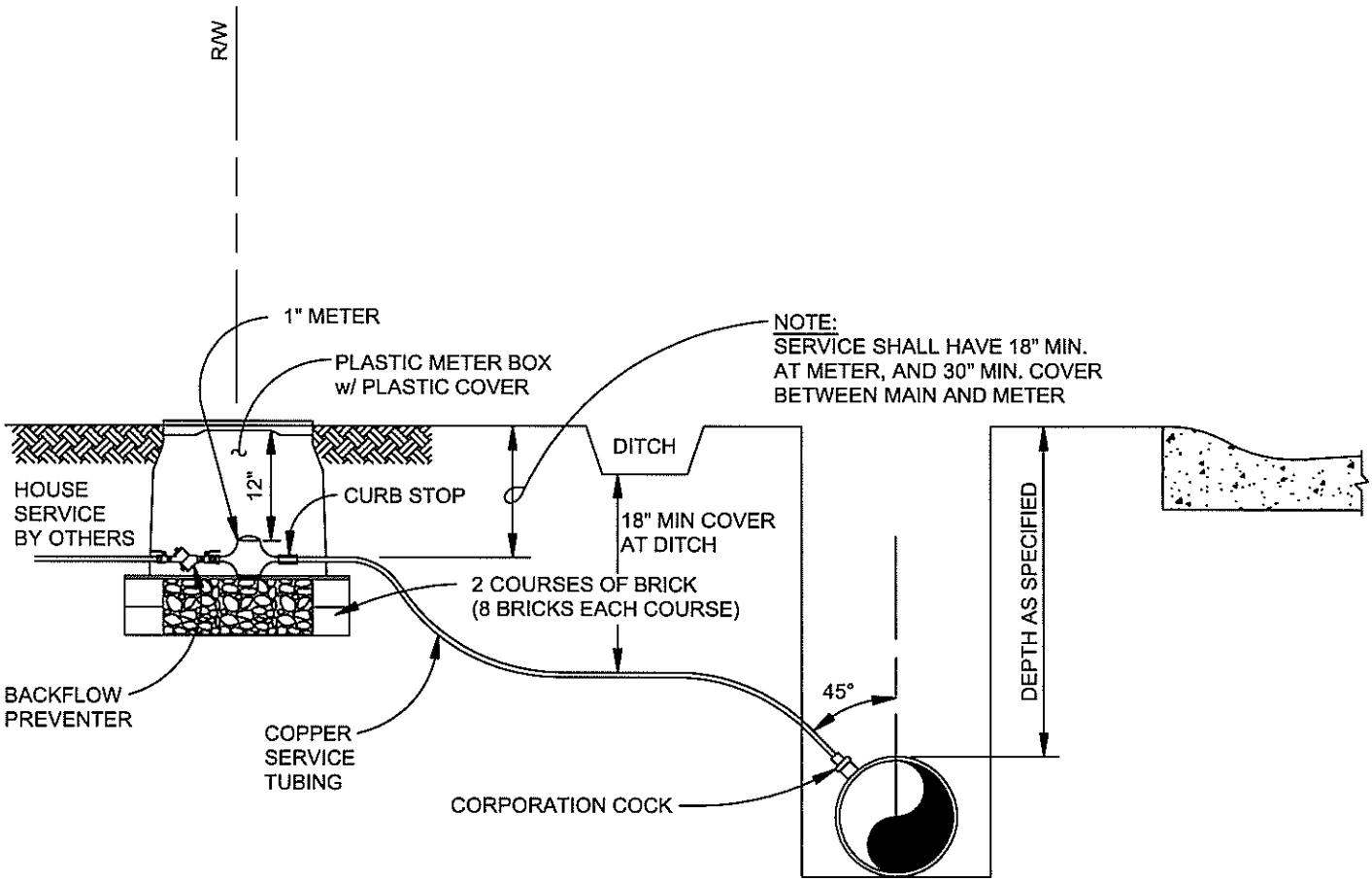

NOTES:

1. SERVICE LINE SHALL BE 1" FROM MAIN TO METER.
2. USE ALL FLARE JOINTS.
3. INSTALLATION SHALL ALLOW ADEQUATE ROOM TO REMOVE AND/OR REPAIR METER.
4. BACKFLOW PREVENTER SHALL BE INCLUDED IN METER BOX WITH METER.
5. METER BOX SHALL BE APPROXIMATELY 18" X 24".
6. THIS DETAIL AUTHORIZED FOR USE FOR INSTALLATION OF 1" RESIDENTIAL IRRIGATION METERS.
7. FOR A 1 1/2" RESIDENTIAL METER, USE THE 1"-1 1/2" COMMERCIAL METER INSTALLATION DETAIL (401-05.2).

1" RESIDENTIAL METER INSTALLATION

PLOTTED: APRIL 27, 2010

Marietta WATER	1" RESIDENTIAL METER INSTALLATION	Standard No. 401-05.1

S:\MARIETTA\BLW\BLW DETAILS 2010\401-05.2.DWG

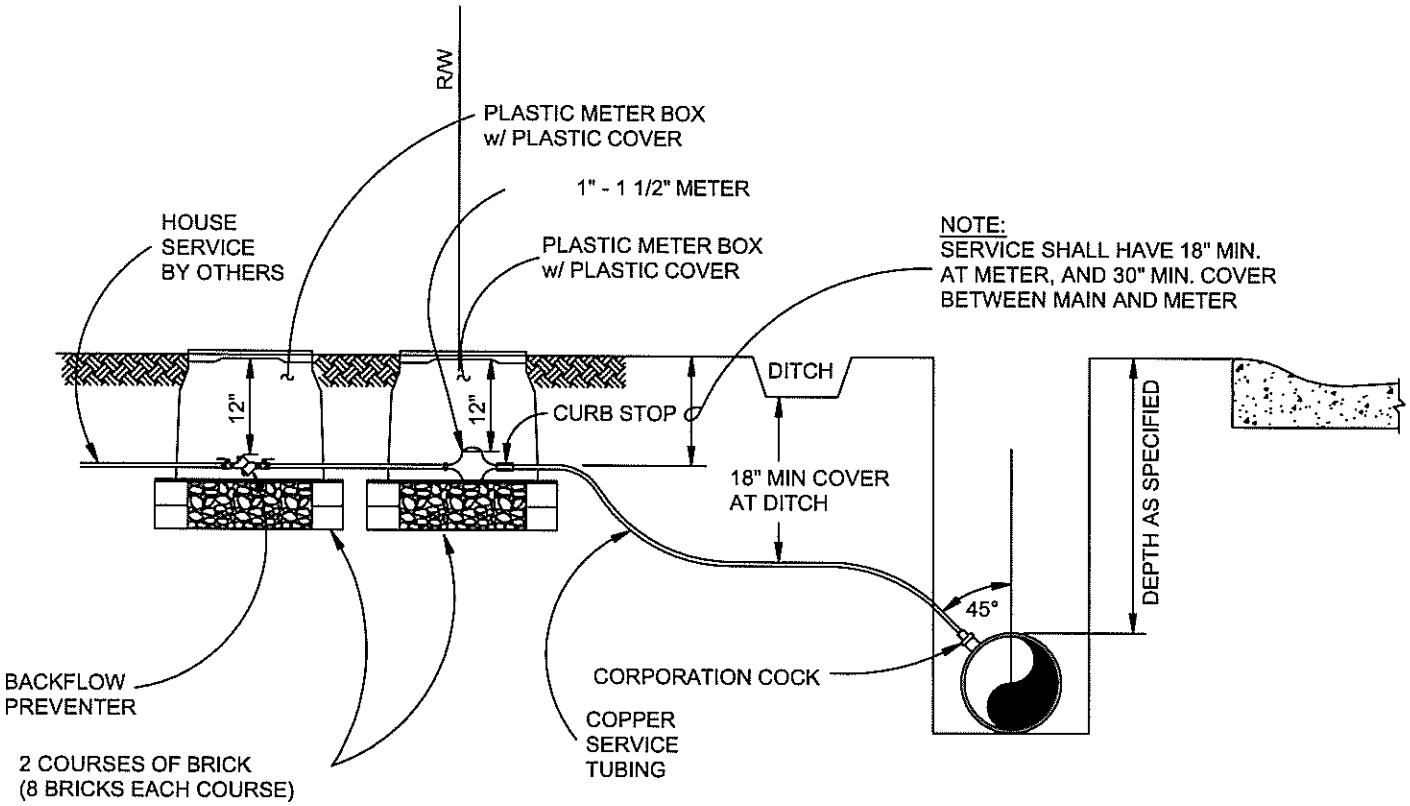

NOTES:

1. SERVICE LINE SHALL BE SAME SIZE AS METER FROM THE MAIN.
2. USE ALL FLARE JOINTS.
3. INSTALLATION SHALL ALLOW ADEQUATE ROOM TO REMOVE AND/OR REPAIR METER.
4. FOR 1" AND LARGER COMMERCIAL METERS, THE BACKFLOW PREVENTER SHALL BE SEPARATE FROM THE METER.
5. THE BACKFLOW PREVENTER SHALL BE INSTALLED IN A SEPARATE BOX.
6. BOTH METER BOXES SHALL BE APPROXIMATELY 24" X 36".
7. THIS DETAIL AUTHORIZED FOR USE FOR INSTALLATION OF 1" - 1 1/2" COMMERCIAL METERS.
8. USE THIS DETAIL FOR 1 1/2" RESIDENTIAL METERS.

1" - 1 1/2" COMMERCIAL METER INSTALLATION

PLOTTED: APRIL 27, 2010

Marietta WATER	1" - 1 1/2" COMMERCIAL METER INSTALLATION	Standard No. 401-05.2

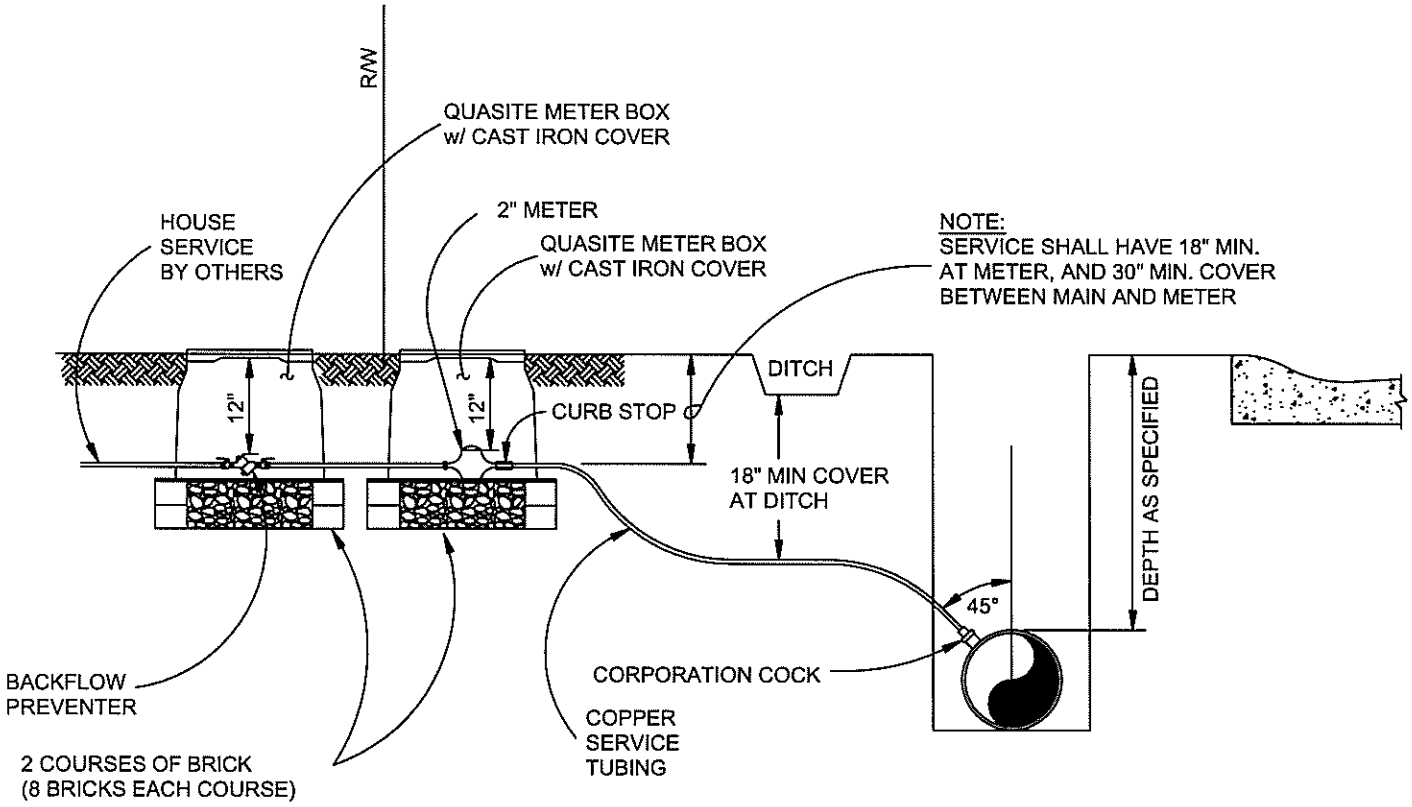

NOTES:

1. SERVICE LINE SHALL BE 2" DIAMETER FROM THE MAIN TO THE METER.
2. USE FLARE OR COMPRESSION JOINTS WITH RETAINER RING.
3. INSTALLATION SHALL ALLOW ADEQUATE ROOM TO REMOVE AND/OR REPAIR METER.
4. THE BACKFLOW PREVENTER SHALL BE SEPARATE FROM THE METER.
5. THE BACKFLOW PREVENTER SHALL BE INSTALLED IN A SEPARATE BOX.
6. BOTH METER BOXES SHALL BE APPROXIMATELY 24" X 36".
7. THIS DETAIL AUTHORIZED FOR USE FOR INSTALLATION OF 2" COMMERCIAL IRRIGATION METERS.

2" COMMERCIAL METER INSTALLATION

Marietta WATER	2" COMMERCIAL METER INSTALLATION	Standard No. 401-05.3

S:\MARIETTABLWBLW DETAILS 2010\401-05.3.DWG
PLOTTED: APRIL 27, 2010

METER SIZE	VAULT			HATCH SIZE
	L	W	D	
3" x 2"	8'	4.5'	5'	3'x3'
4" x 2"	8'	4.5'	5'	3'x3'
6" x 3"	10'	5'	5'	3'x3'
8" x 4"	12'	6'	5'	3'x3'

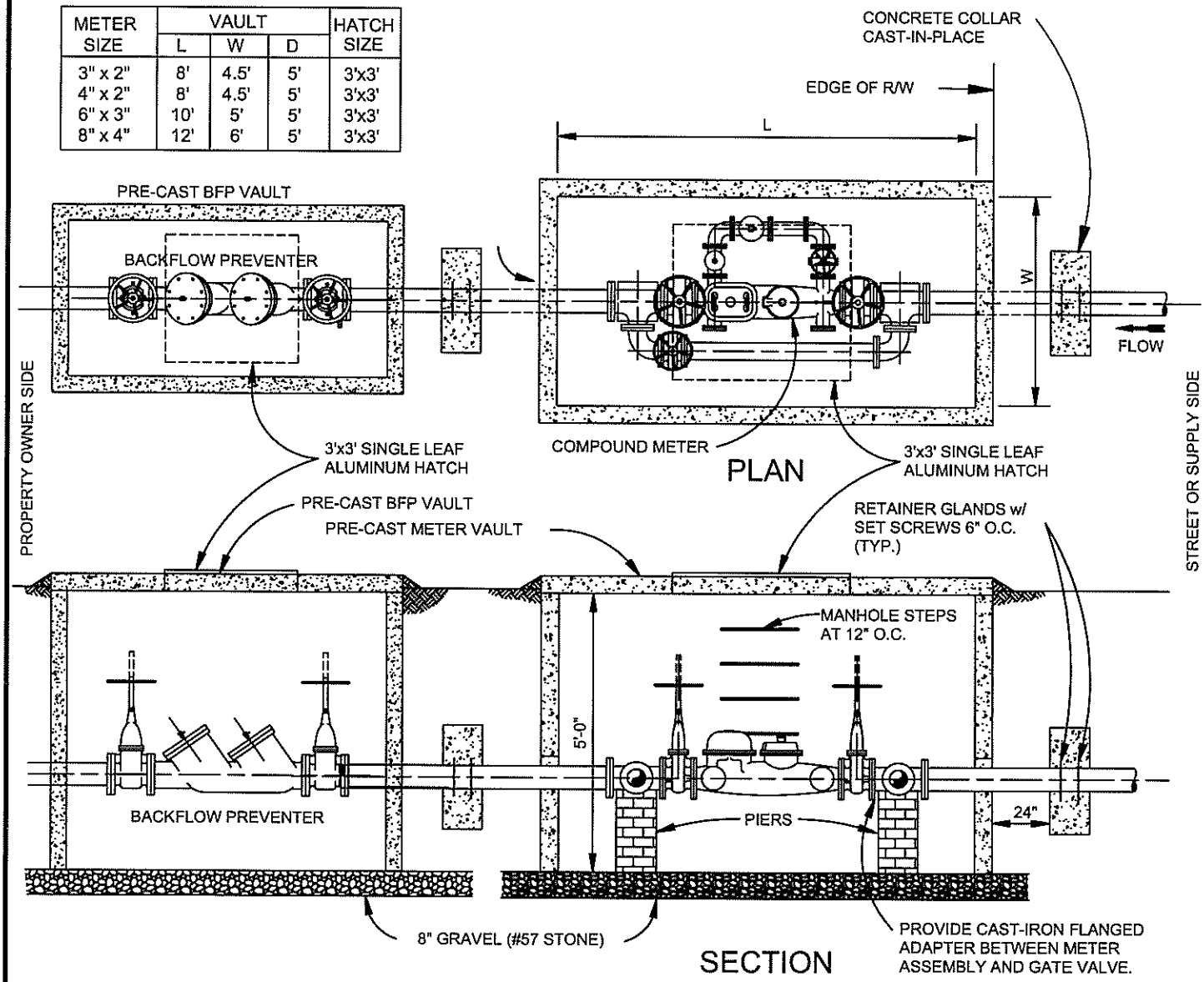

NOTES:

1. BOXES EXCEEDING 5' IN DEPTH MUST BE APPROVED BY MARIETTA WATER.
2. METER TO BE LOCATED OUTSIDE OF R/W. A PERMANENT EASEMENT SHALL BE OBTAINED TO PREVENT FENCES OR OTHER OBSTRUCTIONS FROM BEING ERECTED AROUND THE METER BOX.
3. COVER OPENING & STEPS TO BE PLACED NEAREST THE METER REGISTER.
4. BYPASS REQUIRED (WITH VALVES), TO BE INSTALLED INSIDE THE VAULT.
5. THE METER MUST BE INSTALLED WITH AT LEAST 8 PIPE DIAMETERS OF STRAIGHT PIPE SAME SIZE AS METER ON THE INLET SIDE TO PERMIT ON-SITE MAINTENANCE AND CALIBRATION. A STRAINER MAY BE PROVIDED IN LIEU OF THE STRAIGHT PIPE IN ACCORDANCE WITH THE METER MANUFACTURER'S RECOMMENDATIONS. AN INLET AND OUTLET GATE VALVE WITH BYPASS LINE ARE REQUIRED (SEE ILLUSTRATION).
6. THESE BOXES ARE NOT TO BE INSTALLED IN TRAFFIC AREAS WITHOUT PRIOR PERMISSION FROM MARIETTA WATER.
7. BACK FLOW PREVENTION REQUIRED ON PROPERTY OWNER'S SIDE OF METER AS SHOWN. LOCATION SHALL BE APPROVED BY MARIETTA WATER. ALL BACKFLOW PREVENTERS SHALL BE INSTALLED IN VAULTS. VAULTS FOR 3" AND 4" BACKFLOW PREVENTERS SHALL BE 4' WIDE AND 5' LONG. VAULTS FOR 6" AND 8" BACKFLOW PREVENTERS SHALL BE 4' WIDE AND 7' LONG. VAULTS SHALL BE 5' DEEP.
8. ALL VALVES AND FITTINGS INSIDE THE VAULT SHALL BE FLANGED.
9. ALL FITTINGS OUTSIDE THE VAULT SHALL BE MECHANICAL JOINT WITH RETAINER GLANDS.
10. ALL METERS SHALL COME EQUIPPED WITH A TOUCHREAD OR TOUCHLESS SENSOR COMPATIBLE WITH MARIETTA WATER'S METER READING EQUIPMENT.
11. THIS DETAIL AUTHORIZED FOR USE FOR INSTALLATION OF 3" AND LARGER IRRIGATION METERS.

Marietta WATER

COMPOUND METERS AND VAULT

Standard No.

401-06

S:\MARIETTA\BLW\BLW DETAILS 2010\401-06.DWG
PLOTTED: APRIL 27, 2010

S:\MARIETTABLW\BLW DETAILS 2010\401-07.DWG

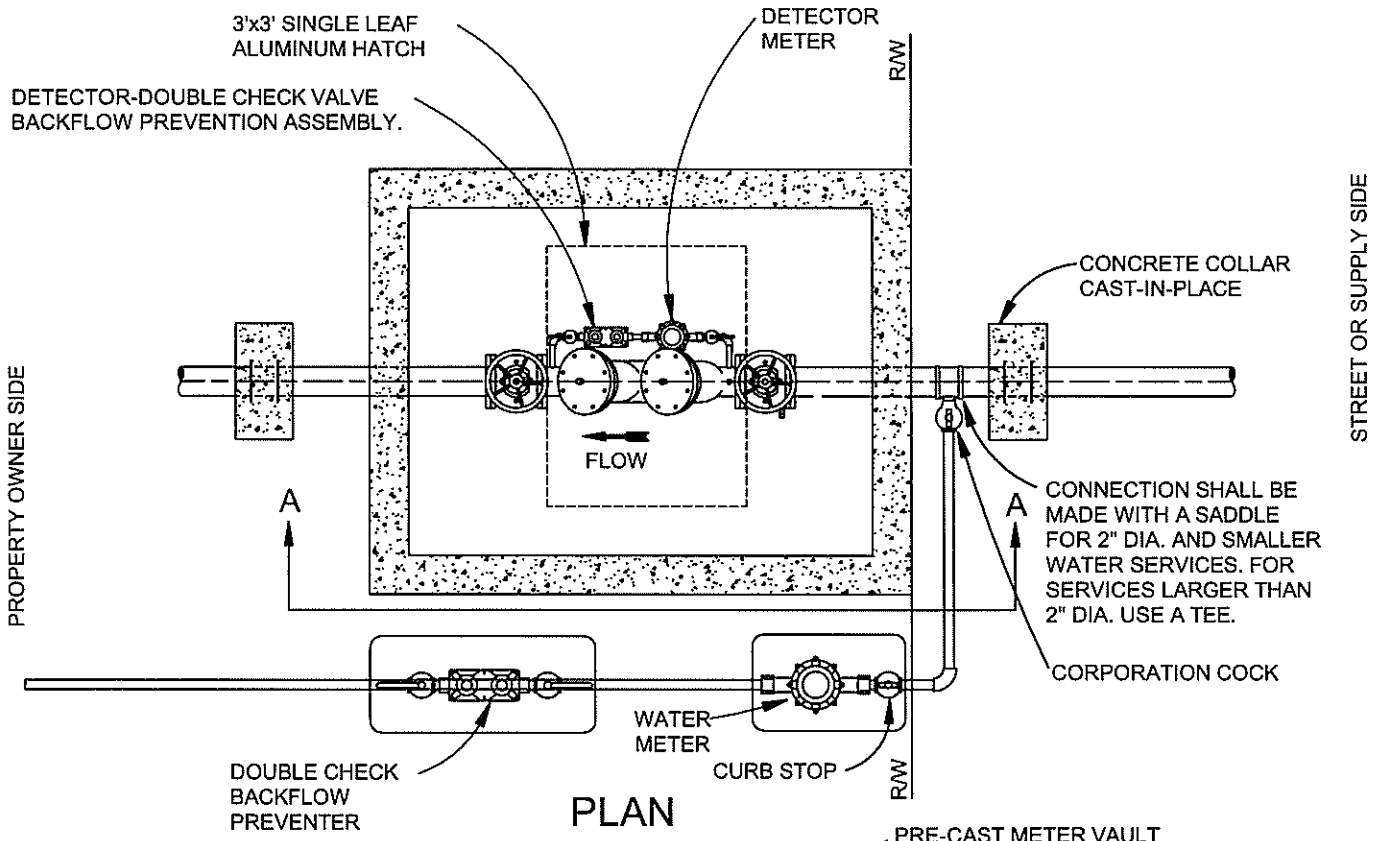

PLAN

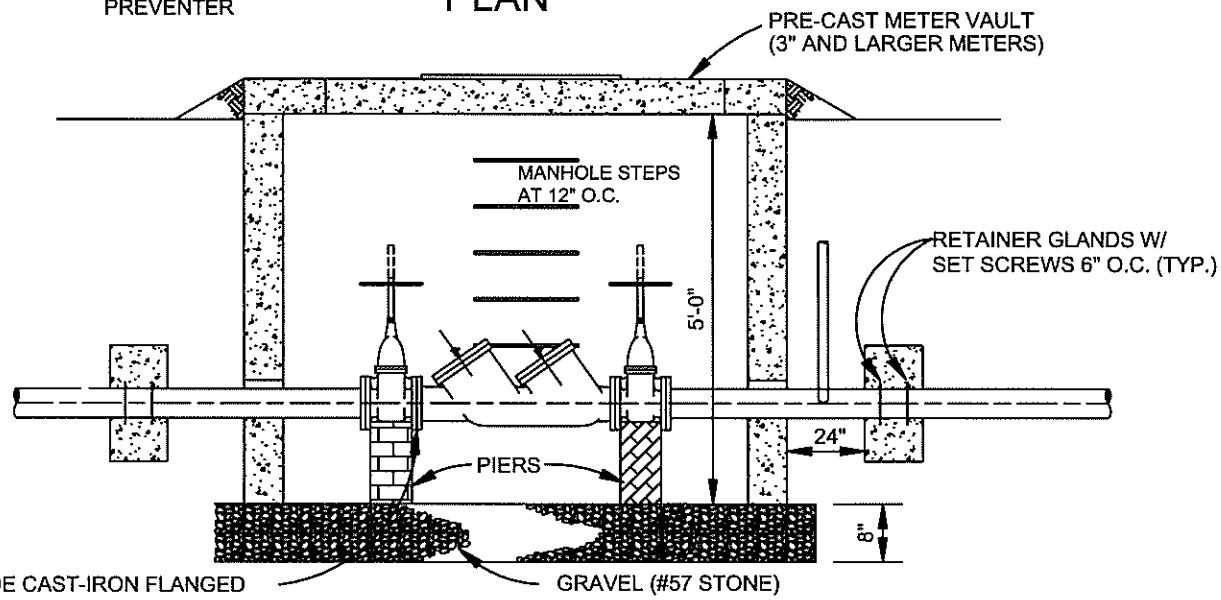

SECTION A-A

FIRE LINE SIZE	VAULT L	VAULT W	HATCH SIZE
2"	3'	2'	N/A
3"	8.5'	4'	3'x3'
4"	8.5'	4'	3'x3'
6"	8.5'	4'	3'x3'
8"	8.5'	4'	3'x3'

NOTES:

1. BOXES EXCEEDING 5' IN DEPTH MUST BE APPROVED BY MARIETTA WATER.
2. METER VAULT TO BE LOCATED OUTSIDE OF R/W. A PERMANENT EASEMENT SHALL BE OBTAINED TO PREVENT FENCES OR OTHER OBSTRUCTION FROM BEING ERECTED AROUND THE METER BOX.
3. COVER OPENING & STEPS TO BE PLACED NEAREST THE METER REGISTER.
4. THESE BOXES ARE NOT TO BE INSTALLED IN TRAFFIC AREAS WITHOUT PRIOR PERMISSION FROM MARIETTA WATER.
5. ALL VALVES AND FITTINGS INSIDE THE VAULT SHALL BE FLANGED.
6. REDUCED PRESSURE DETECTOR ASSEMBLY (RPDA) REQUIRED WHEN THE DANGER FROM BACKFLOW PRESENTS A HEALTH HAZARD. ALL RPDA'S SHALL BE INSTALLED IN VAULTS SET ABOVE THE GROUND WITH DRAINS.
7. ALL METERS SHALL COME EQUIPPED WITH A TOUCHREAD OR TOUCHLESS SENSOR COMPATIBLE WITH MARIETTA WATER'S METER READING EQUIPMENT.

PLOTTED: APRIL 27, 2010

Marietta WATER

DETECTOR/WATER METERS AND VAULT

Standard No.

401-07

S: \MARIETTABLW\BLW DETAILS 2010\401-08.D

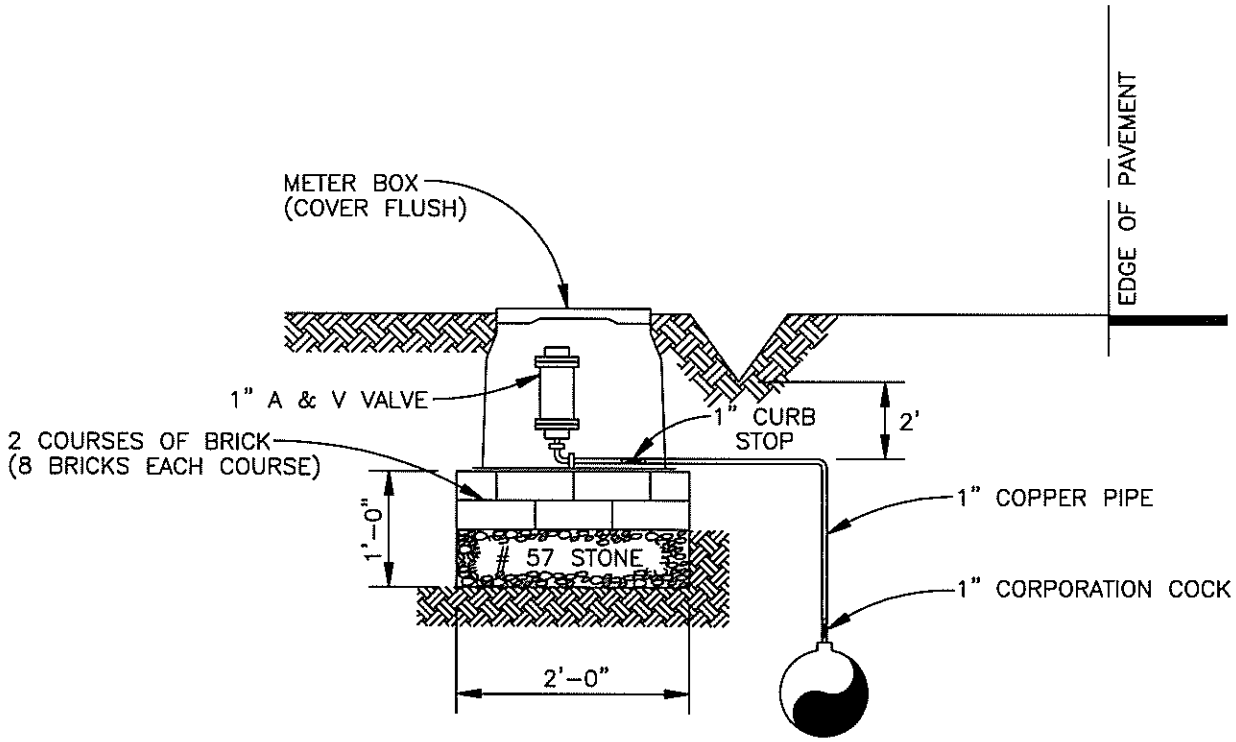

NOTES:
1. VALVE MARKER REQUIRED.
2. A & V VALVE AND COPPER SHALL BE SIZED IN ACCORDANCE WITH VALVE MANUFACTURER'S RECOMMENDATIONS.

TYPICAL WATER AIR & VACUUM RELEASE VALVE ASSEMBLY

PLOTTED: APRIL 27, 2010

Marietta WATER

WATER
A&V RELEASE VALVE
ASSEMBLY

Standard No.
401-08

S:\MARIETTABLW\BLW DETAILS 2010\401-09.D

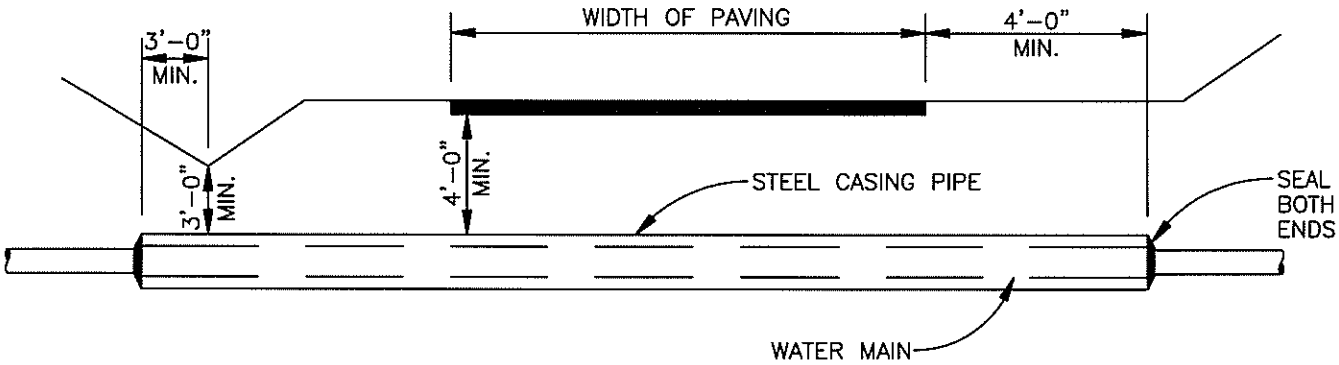

NOTES:

1. CASING PIPE SHALL EXTEND A MINIMUM OF 3' BEYOND TOE OF FILL SLOPES OR DITCH LINES AND 4' BEYOND EDGE OF PVMT. AND BACK OF CURB.

2. CASING SPACERS SHALL BE INSTALLED ACCORDING TO MANUFACTURER'S RECOMMENDATIONS.

TYPICAL ROAD CROSSING

PLOTTED: APRIL 27, 2010

Marietta WATER

TYPICAL
ROAD CROSSING

Standard No.
401-09

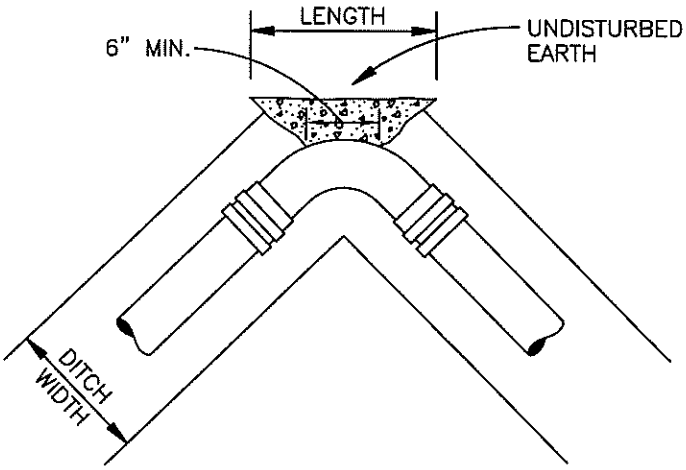

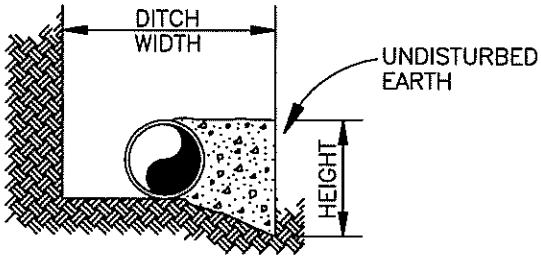

TABLE FOR CONCRETE BLOCKING
(12" PIPE, 200 PSI TEST PRESSURE)

FITTING	MINIMUM BEARING AREA LENGTH x HEIGHT
11 1/4° BEND	2' x 1.5'
22 1/2° BEND	3' x 2'
45° BEND	4' x 3'
90° BEND	5.5' x 4'
TEE	4' x 4'
DEAD END	4' x 4'

FOR SMALLER PIPE, THE ABOVE BLOCKING BEARING AREA CAN BE MULTIPLIED BY REDUCTION FACTORS SHOWN BELOW; HOWEVER, THE LEAST DIMENSION IS TO BE NOT LESS THAN 1 FOOT.

PIPE SIZE	REDUCTION FACTOR
10"	0.70
8"	0.45
6"	0.25

NOTE:

1. SOIL BEARING STRENGTH OF 1500 PSF IS ASSUMED IN THE CALCULATIONS ABOVE.
2. REDUCTION FACTOR IS TO BE MULTIPLIED BY BEARING AREA, NOT BY LENGTH AND HEIGHT DIMENSIONS.

CONCRETE BLOCKING DETAIL

S:\MARIETTABLW\BLW DETAILS 2010\401-11.L

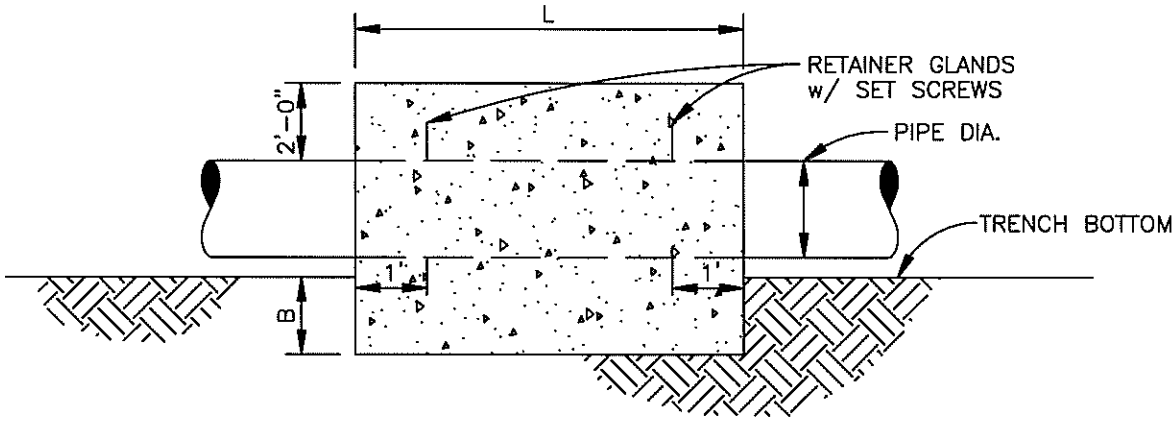

PROFILE VIEW

PIPE DIA.	L	B
8"	3'	1'
10"	3'	1'
12"	3'	1'
16"	3'	2'

NOTES:

1. CONCRETE COLLAR WIDTH EQUALS THE WIDTH OF THE TRENCH PLUS FOUR FEET (TWO FEET ON EACH SIDE OF THE TRENCH).

2. EFFECTIVE DESIGN FOR SYSTEMS WITH TOTAL SYSTEM PRESSURE (WORKING AND SURGE) UP TO 250 PSI, BASED UPON SOIL BEARING STRENGTH OF 1500 PSF.

CONCRETE THRUST COLLAR

PLOTTED: APRIL 27, 2010

Marietta WATER

CONCRETE THRUST COLLAR

Standard No. 401-11

S:\MARIETTABLW\BLW DETAILS 2010\401-12.D

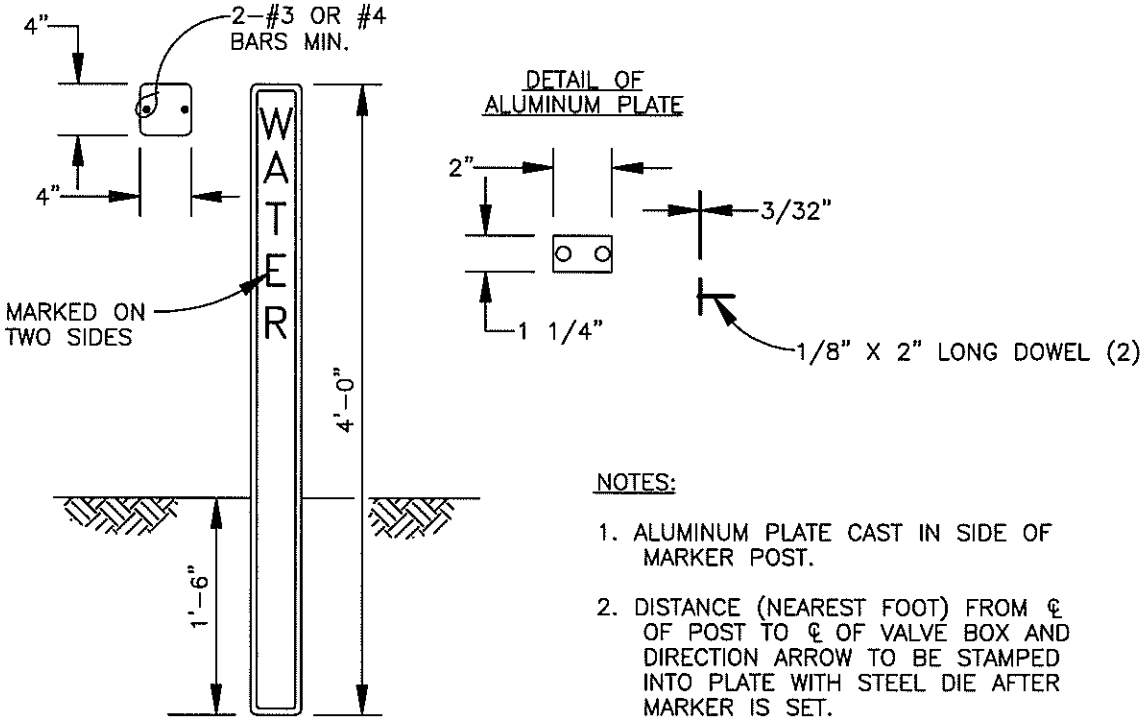

NOTES:

1. ALUMINUM PLATE CAST IN SIDE OF MARKER POST.
2. DISTANCE (NEAREST FOOT) FROM ℄ OF POST TO ℄ OF VALVE BOX AND DIRECTION ARROW TO BE STAMPED INTO PLATE WITH STEEL DIE AFTER MARKER IS SET.
3. INSTALL VALVE MARKERS AS REQUIRED BY MARIETTA WATER.

DETAIL OF CONCRETE VALVE MARKER

PLOTTED: APRIL 27, 2010

Marietta WATER	CONCRETE VALVE MARKER	Standard No. 401-12

S:\MARIETTABLW\BLW DETAILS 2010\401-13.L

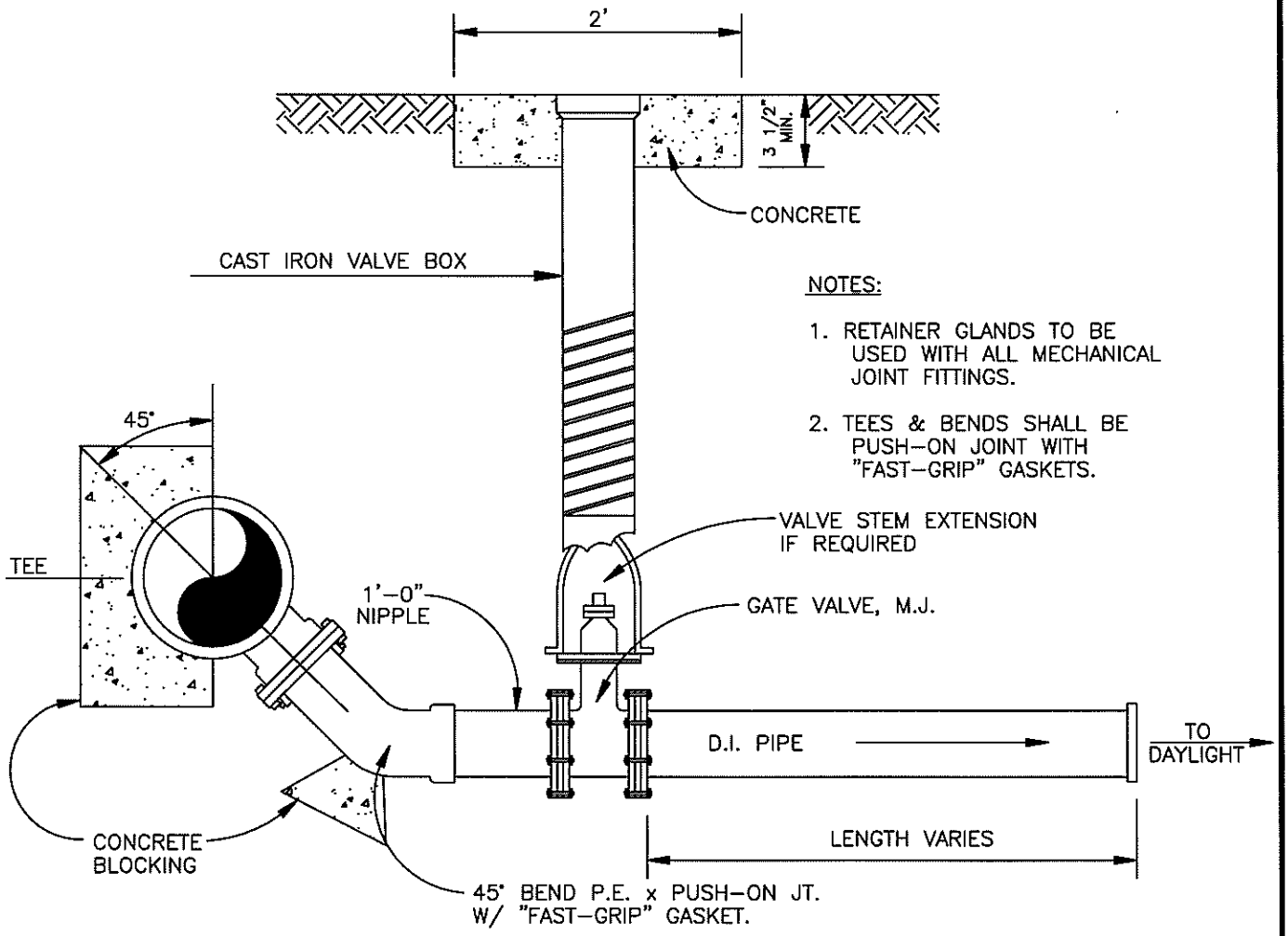

NOTES:

1. RETAINER GLANDS TO BE USED WITH ALL MECHANICAL JOINT FITTINGS.
2. TEES & BENDS SHALL BE PUSH-ON JOINT WITH "FAST-GRIP" GASKETS.

BLOW-OFF ASSEMBLY

NOTE:
DO NOT USE IN AREA
WHERE FLOODING WILL OCCUR

PLOTTED: APRIL 27, 2010

Marietta WATER	BLOW-OFF ASSEMBLY	Standard No. 401-13

IF REPLACEMENT IS NECESSARY, THE VALVE BOX SHALL BE AN APPROVED STANDARD CAST IRON ADJUSTABLE WITH A MINIMUM DIAMETER OF 5-1/4". THE LID SHALL BEAR THE WORD "WATER" OR THE LETTER "W". BOXES SHALL BE EQUAL TO EAST JORDAN IRON WORKS 8550 SERIES 562-S.

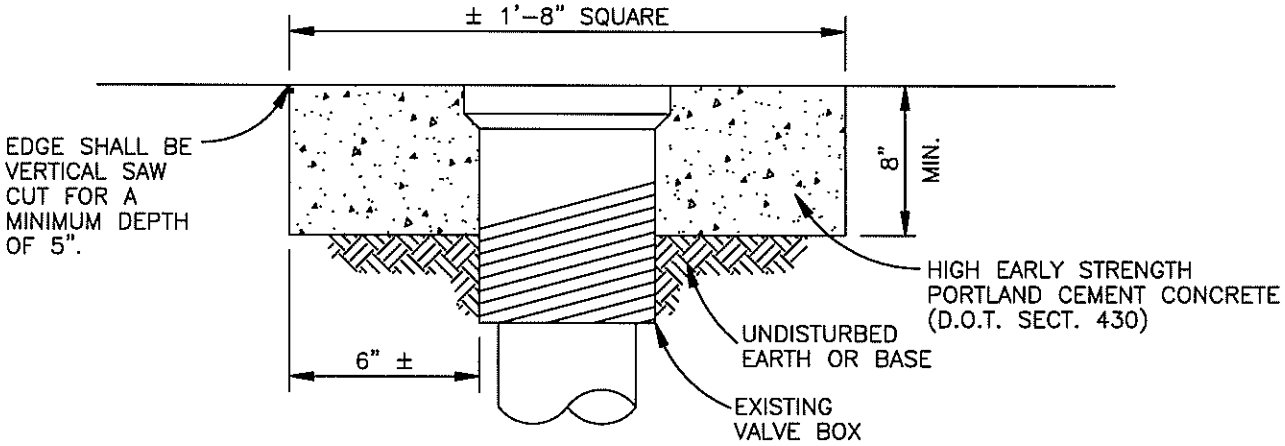

WATER VALVE BOX GRADE ADJUSTMENT

NOT TO SCALE

NOTES:

1. PORTLAND CONCRETE FOR COLLAR SHALL BE MIN. OF 8" THICK BELOW THE EXIST. PAVEMENT TO UNDISTURBED EARTH.
2. BEFORE WORKING IN AN AREA, THE CONTRACTOR SHALL NOTIFY MARIETTA WATER.
3. THIS ADJUSTMENT METHOD REQUIRES THE USE OF STEEL PLATES TO PROTECT THE FRESH CONCRETE FOR A MINIMUM OF 24 HOURS. BARRICADES AND CONES ARE NOT ALLOWED. THIS METHOD OF ADJUSTMENT SHALL BE USED IN ALL HIGH TRAFFIC AREAS.

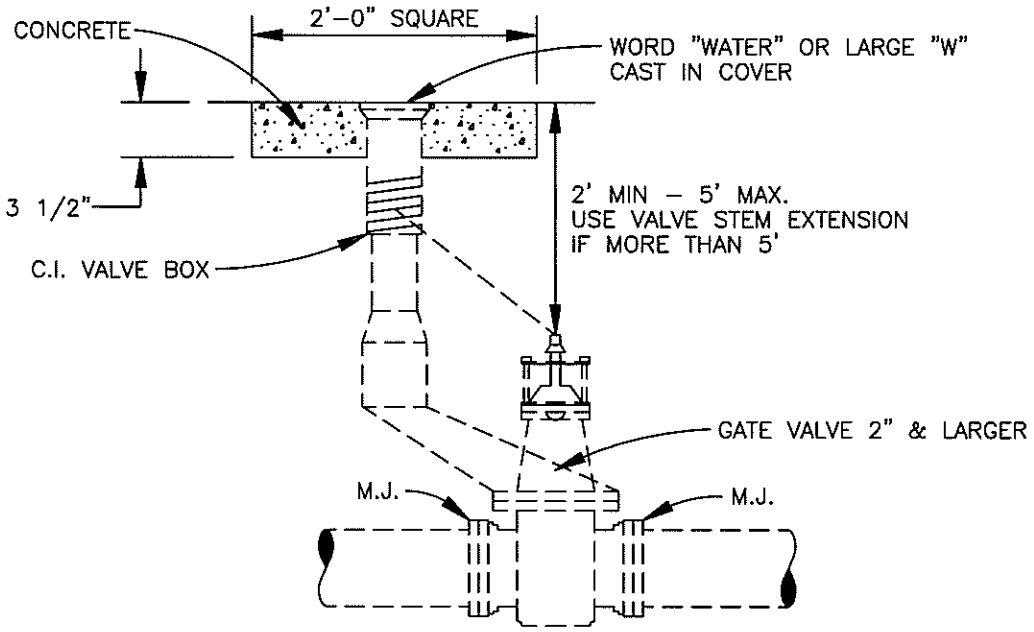

TYPICAL VALVE INSTALLATION

NOTES:

1. TOP OF EXTENSION SHALL BE NO MORE THAN FIVE FEET BELOW FINAL GRADE.
2. EXTENSION REQUIRED IF DEPTH IS GREATER THAN FIVE FEET.
3. EXTENSION MUST BE ONE SOLID PIECE FROM NUT TO COUPLING.

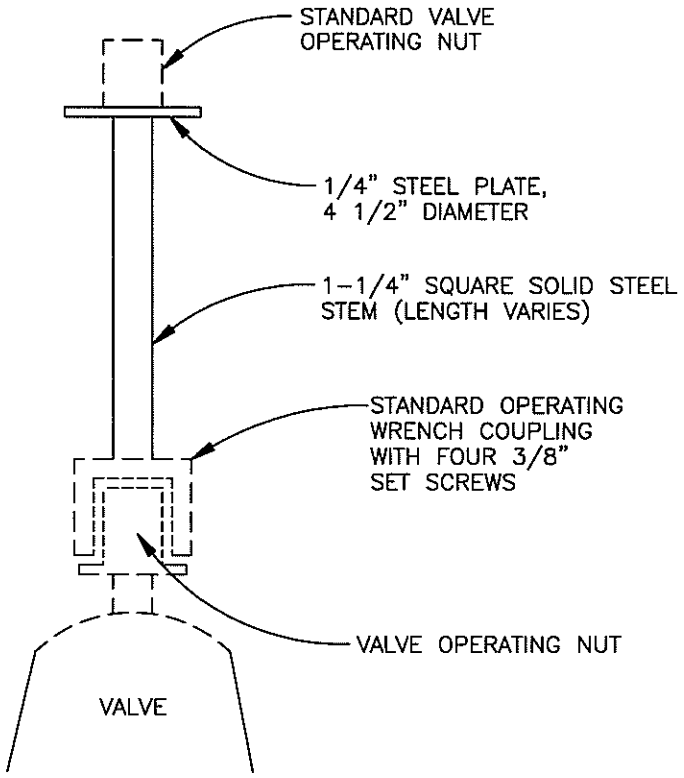

VALVE STEM EXTENSION DETAIL

Marietta WATER	TYPICAL VALVE INSTALLATION	Standard No. 401-15

S:\MARIETTABLW\BLW DETAILS 2010\401-15.L
PLOTTED: APRIL 27, 2010

NOTES:

1. MANHOLES TO BE FLUSH WITH PAVEMENT IN PAVED AREAS.
2. MANHOLES ON OUTFALL LINES ARE TO BE 18" ABOVE GROUND.
3. WATER-TIGHT MANHOLE FRAME AND COVERS SHALL BE DESIGNATED ON PLAN AND PROFILE, AND SHALL BE REQUIRED IN FLOOD PLAINS OR AREAS SUBJECT TO FLOODING (SUBMERGED DURING RAINFALL).

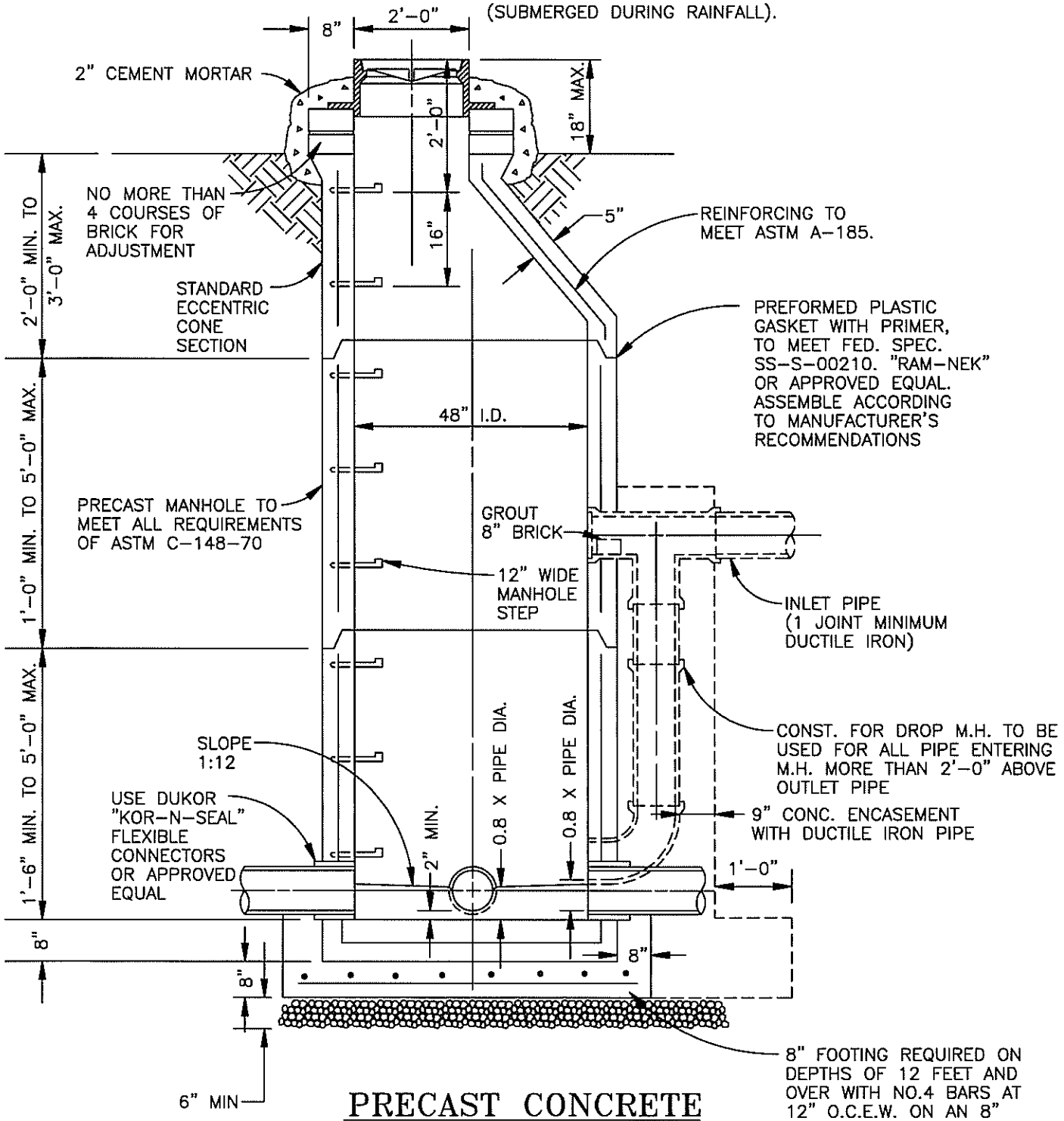

PRECAST CONCRETE MANHOLE

Marietta WATER	PRECAST CONCRETE MANHOLE	Standard No. 402-01

S:\MARIETTABLW\BLW DETAILS 2010\402-01.C

PLOTTED: APRIL 27, 2010

NOTES:

1. MANHOLES TO BE FLUSH WITH PAVEMENT IN PAVED AREAS.
2. MANHOLES ON OUTFALL LINES ARE TO BE 18" ABOVE GROUND.
3. WATER-TIGHT MANHOLE FRAME AND COVERS SHALL BE DESIGNATED ON PLAN AND PROFILE, AND SHALL BE REQUIRED IN FLOOD PLAINS OR AREAS SUBJECT TO FLOODING (SUBMERGED DURING RAINFALL).

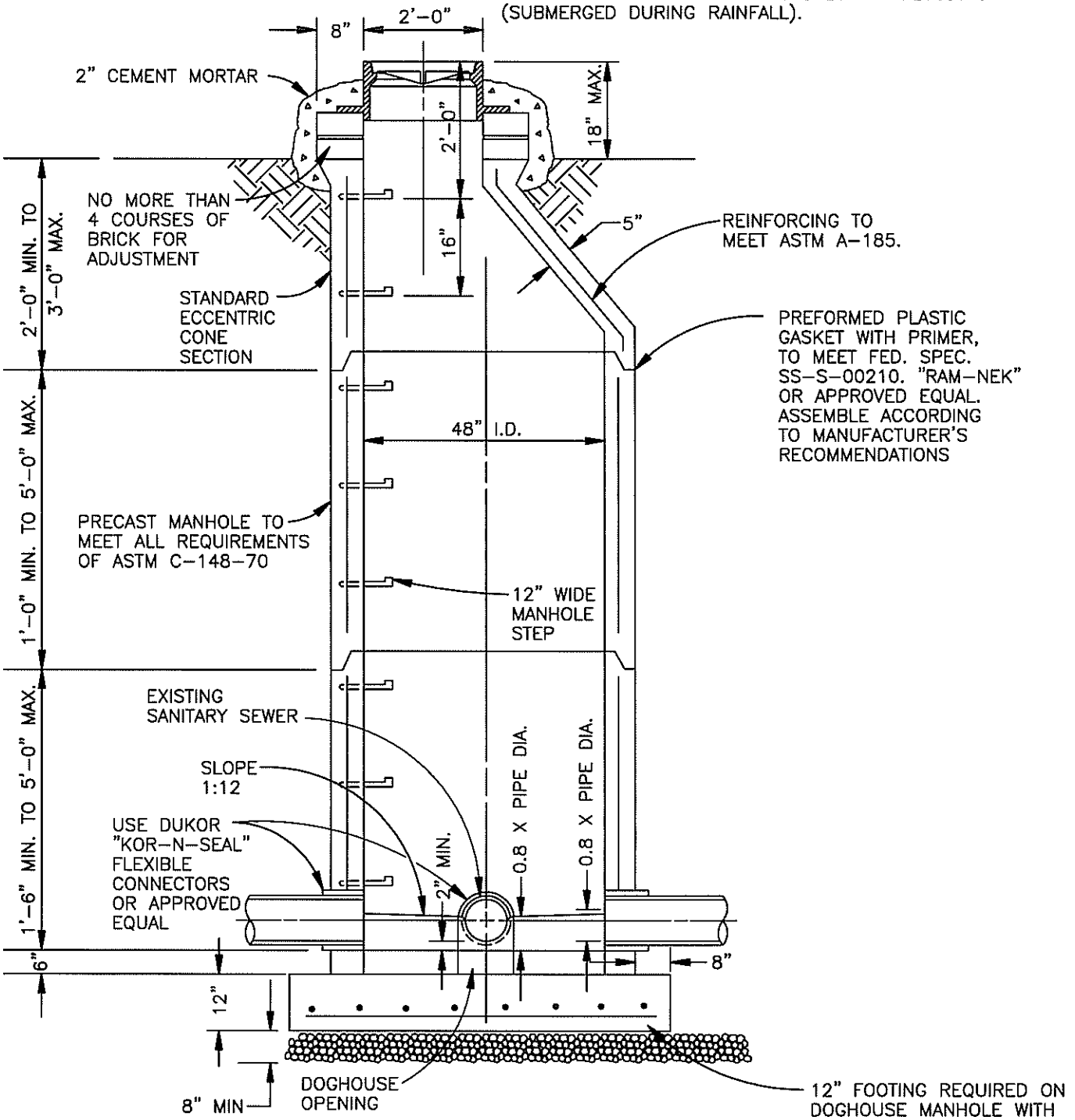

PRECAST CONCRETE MANHOLE

Marietta WATER	PRECAST CONCRETE DOGHOUSE MANHOLE	Standard No. 402-01A

S:\MARIETTABLW\BLW DETAILS 2010\402-01A.C

PLOTTED: APRIL 27, 2010

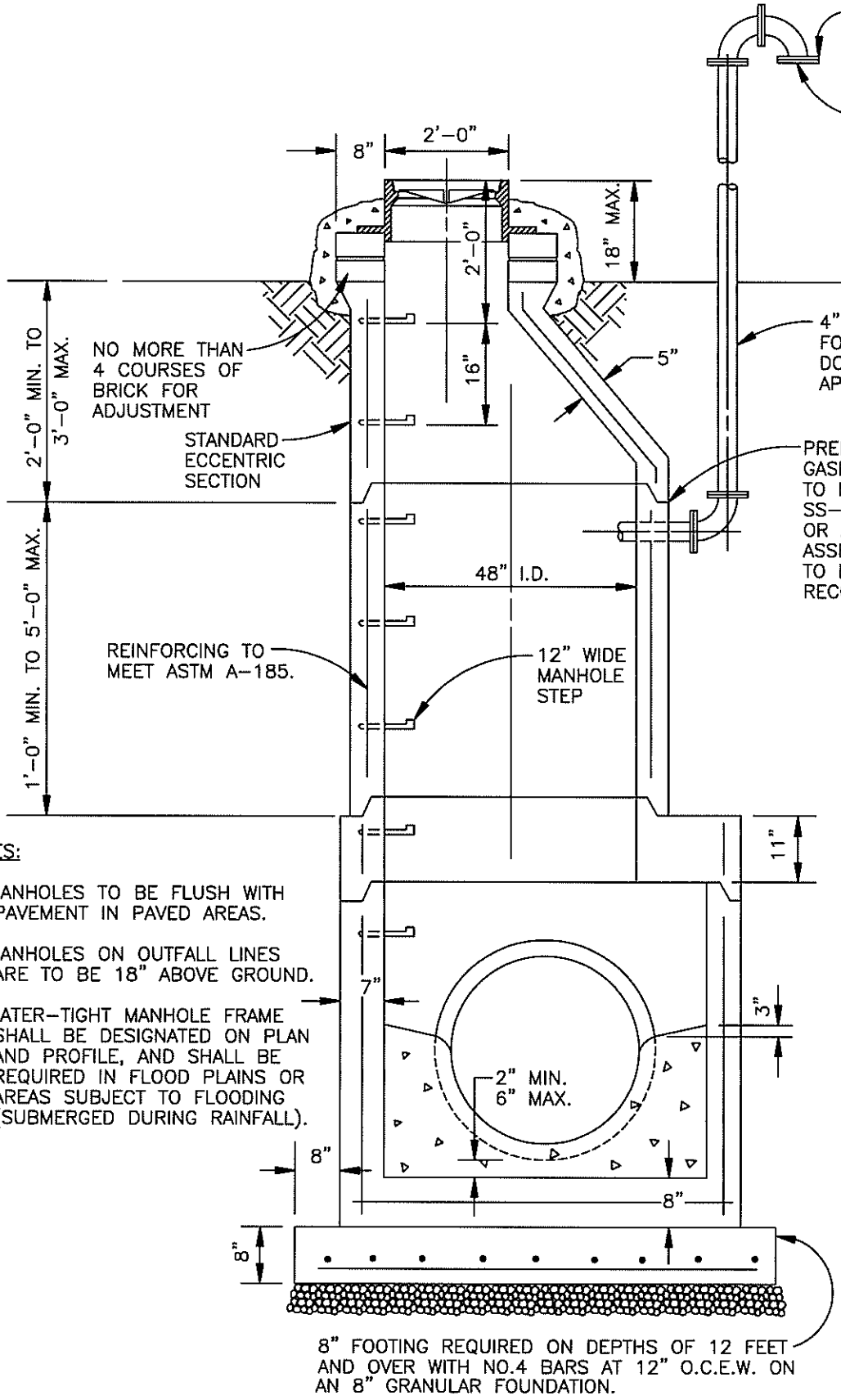

NOTES:

1. MANHOLES TO BE FLUSH WITH PAVEMENT IN PAVED AREAS.
2. MANHOLES ON OUTFALL LINES ARE TO BE 18" ABOVE GROUND.
3. WATER-TIGHT MANHOLE FRAME SHALL BE DESIGNATED ON PLAN AND PROFILE, AND SHALL BE REQUIRED IN FLOOD PLAINS OR AREAS SUBJECT TO FLOODING (SUBMERGED DURING RAINFALL).

STANDARD VENTED MANHOLE (FOR PIPE LARGER THAN 18")

Marietta WATER	STANDARD VENTED MANHOLE	Standard No. 402-02

S:\MARIETTABLW\BLW DETAILS 2010\402-02.D

PLOTTED: APRIL 27, 2010

S:\MARIETTABLW\BLW DETAILS 2010\402-03.D

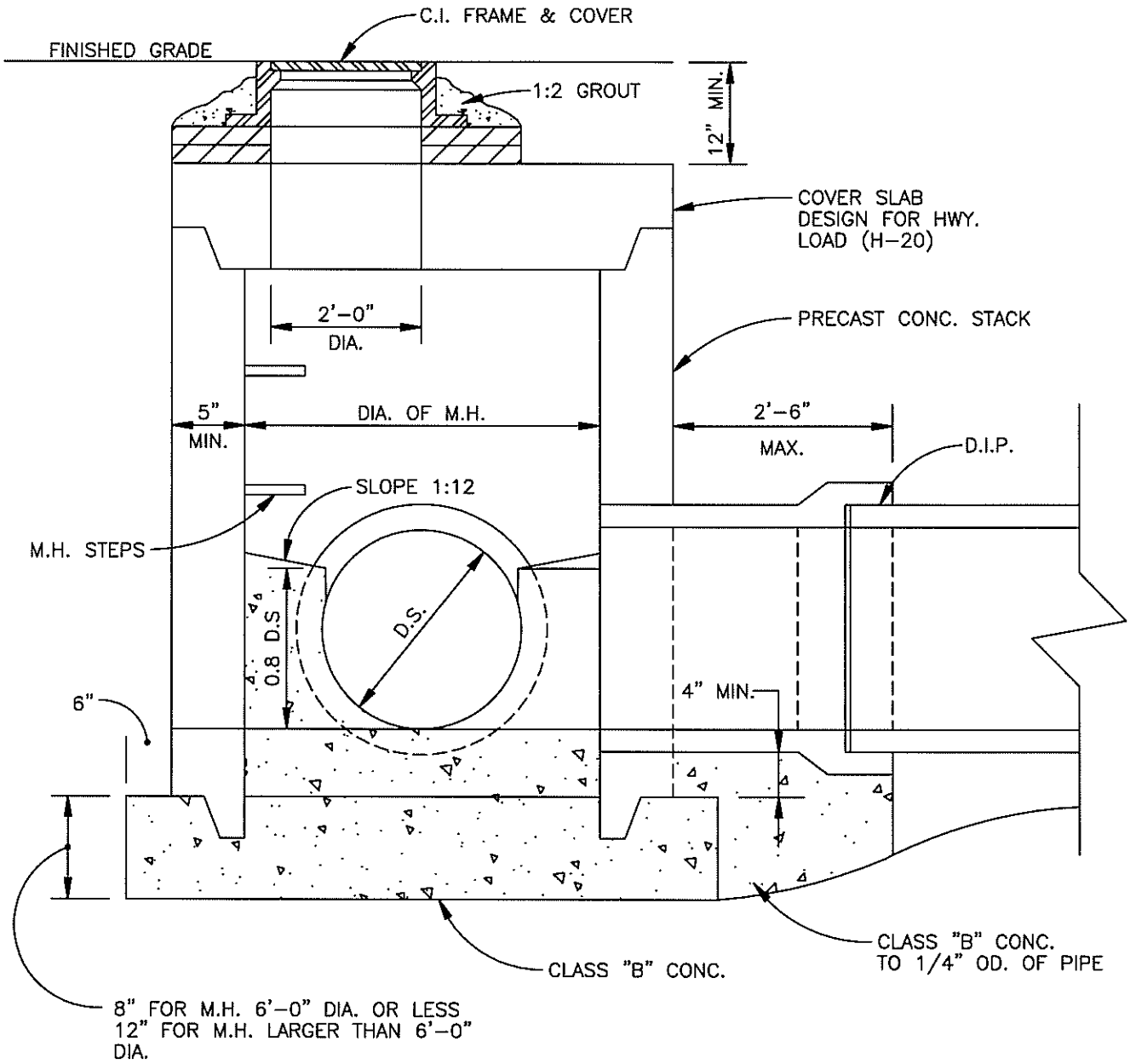

SHALLOW MANHOLE DETAIL

PLOTTED: APRIL 27, 2010

Marietta WATER

SHALLOW MANHOLE DETAIL

Standard No. 402-03

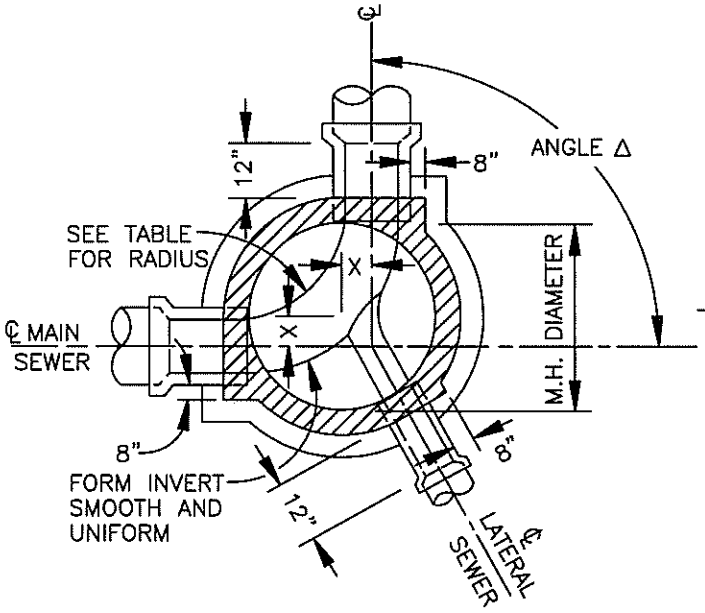

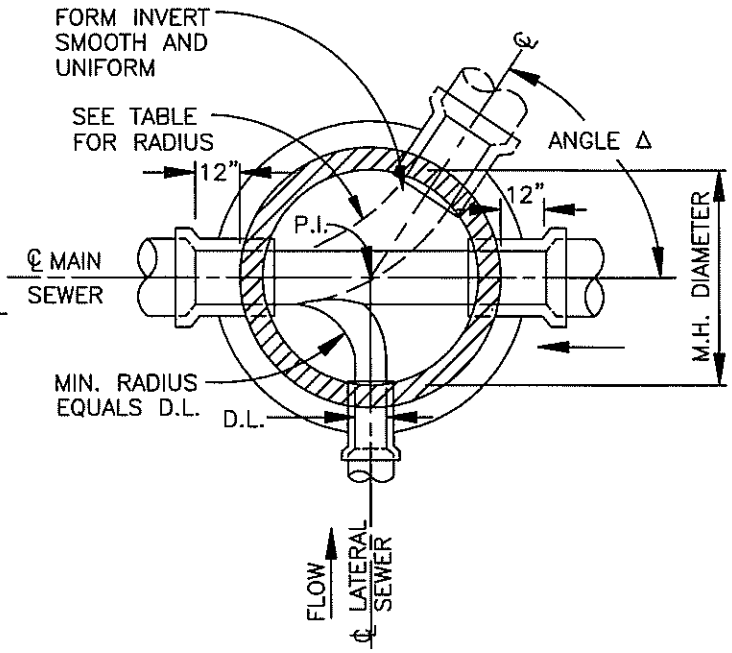

TYPICAL PLANS
STANDARD MANHOLE

STANDARD MANHOLE
SCHEDULE OF GOVERNING DIMENSIONS

PIPE SIZE	ANGLE Δ	MANHOLE DIAMETER	"R"	"X"
8" TO 18"	0° TO 90°	4'–0"	2'–0"	0"
21" & 24"	0° TO 60°	4'–0"	2'–0"	6"
21" & 24"	60° TO 70°	5'–0"	2'–0"	6"
21" & 24"	70° TO 80°	5'–0"	2'–0"	7- 1/2"
21" & 24"	80° TO 90°	5'–0"	2'–0"	10- 1/2"
30" & 36"	0° TO 60°	5'–0"	3'–0"	8"
30" & 36"	60° TO 70°	6'–0"	3'–0"	10"
30" & 36"	70° TO 80°	6'–0"	3'–0"	13"
30" & 36"	80° TO 90°	6'–0"	3'–0"	16"
42"	0° TO 35°	6'–0"	3'–0"	3"
42"	35° TO 50°	6'–0"	6'–0"	6"
42"	50° TO 90°	7'–0"	6'–0"	0"
48" & 54"	0° TO 35°	6'–0" & 7'–0"	6'–0"	0"
48" & 54"	35° TO 90°	8'–0"	6'–0"	0"

Marietta WATER

STANDARD
MANHOLE
PLANS

Standard No.
402–04

S:\MARIETTABLW\BLW DETAILS 2010\402-04.D
PLOTTED: APRIL 27, 2010

S:\MARIETTABLW\BLW DETAILS 2010\402-05.D

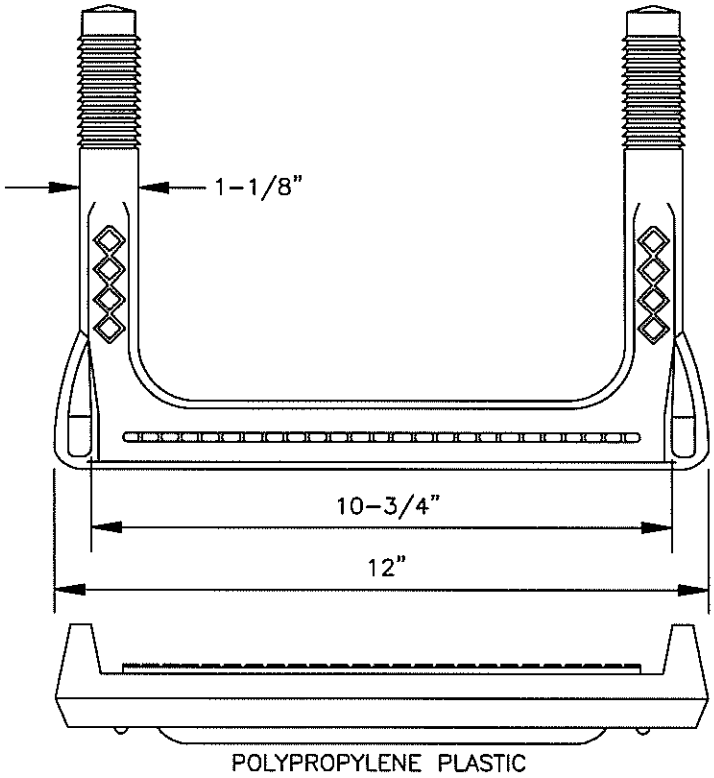

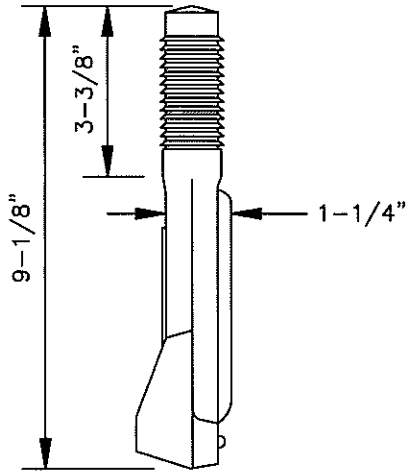

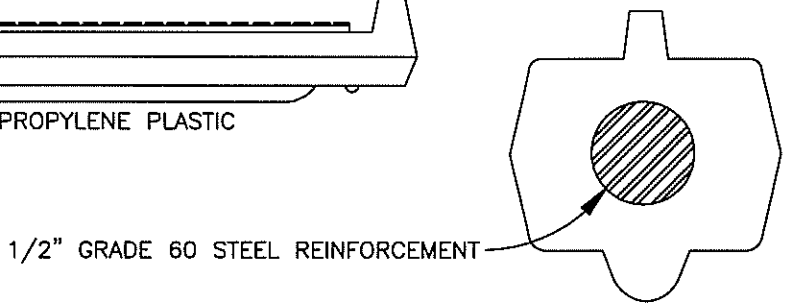

SECTION

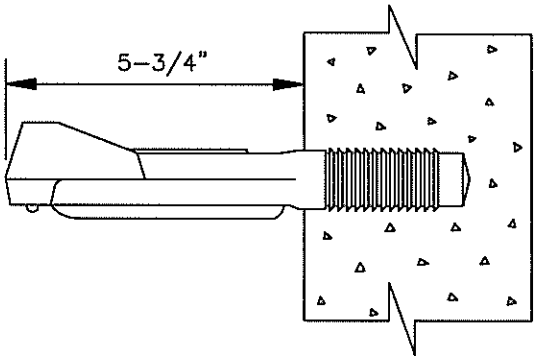

MANHOLE STEP DETAIL

PLOTTED: APRIL 27, 2010

Marietta WATER

MANHOLE STEP

Standard No.

402-05

S: \MARIETTABLW\BLW DETAILS 2010\402-06.D

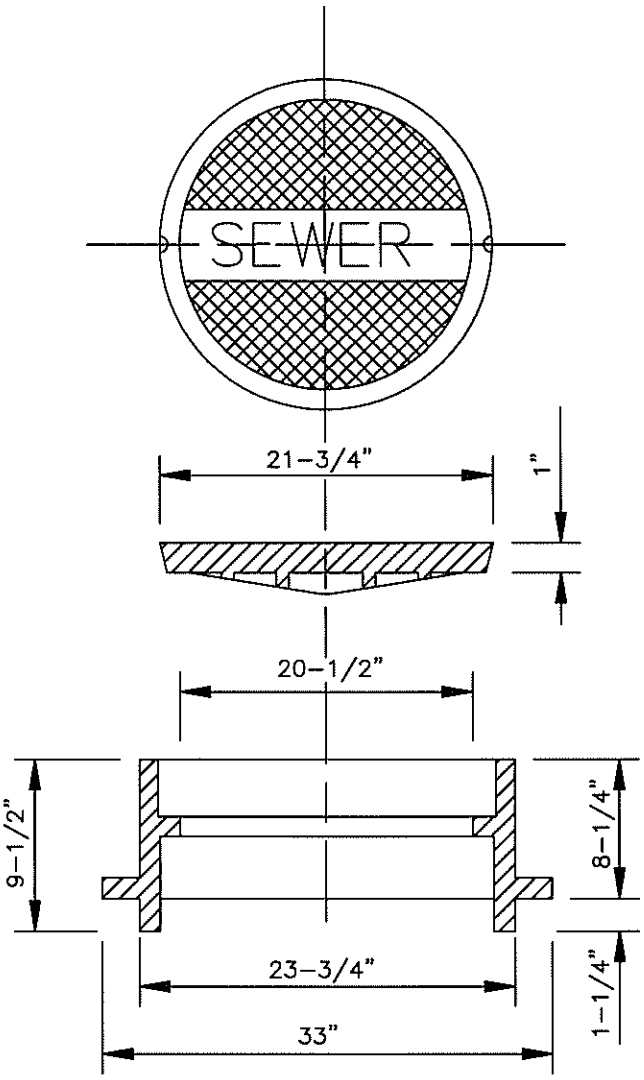

MANHOLE FRAME AND COVER

TOTAL WEIGHT:
300 LB. NON-TRAFFIC
365 LB. IN ROADWAY OR PARKING LOT
435 LB. WATER-TIGHT

PLOTTED: APRIL 27, 2010

Marietta WATER

STANDARD
MANHOLE
FRAME & COVER

Standard No.
402-06

IF REPLACEMENT IS NECESSARY, THE FRAME AND COVER SHALL BE CAST IRON. THE FRAME SHALL WEIGH APPROXIMATELY 230 POUNDS AND THE COVER SHALL WEIGH APPROXIMATELY 150 POUNDS. SEE BOARD OF LIGHTS AND WATER STANDARD MANHOLE FRAME AND COVER.

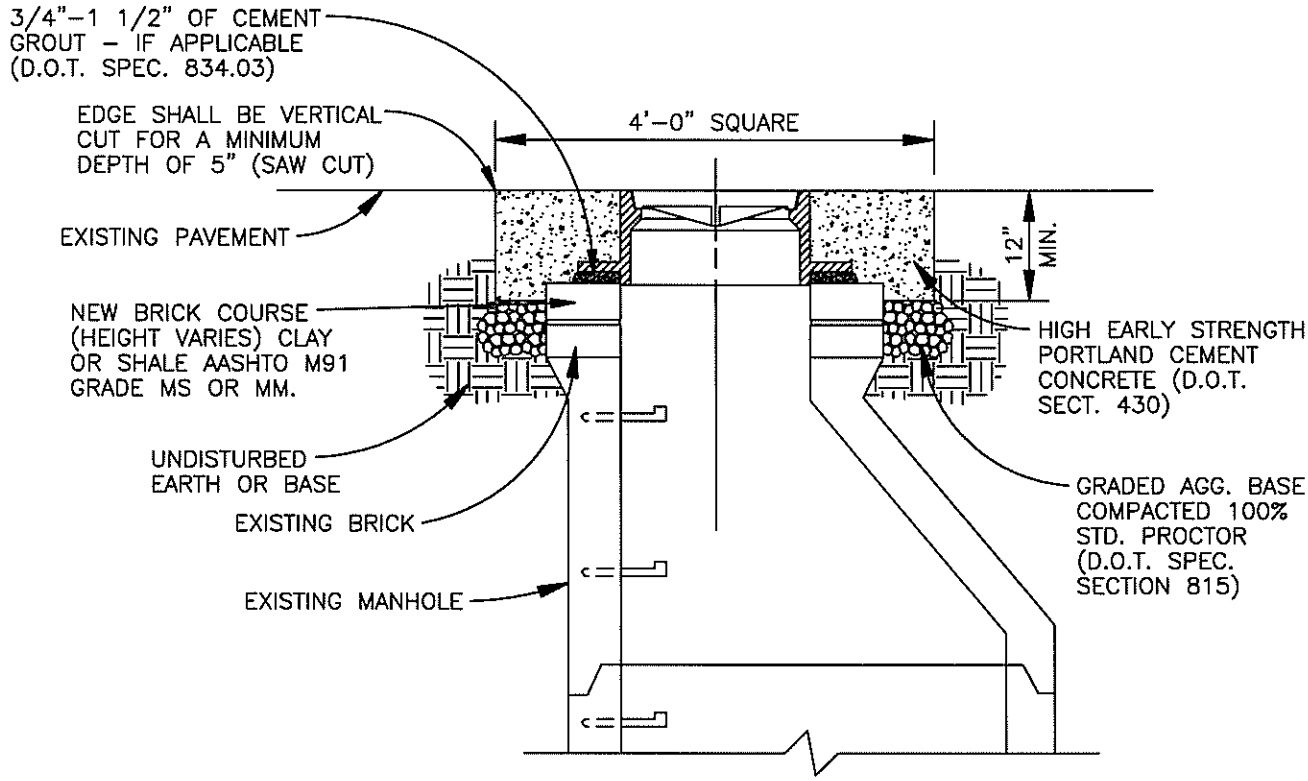

MANHOLE FRAME–GRADE ADJUSTMENT

NOTES:

1. PORTLAND CONCRETE FOR COLLAR SHALL BE A MIN. OF 12" THICK AND SHALL EXTEND FROM THE LAST FULL COURSE OF BRICK TO FLUSH WITH THE EXISTING PAVEMENT.
2. THE CONCRETE SHALL BE LEFT WITH A SMOOTH FINISH FLUSH WITH THE ASPHALT SURFACE.
3. STEEL PLATES ARE REQUIRED BY MARIETTA WATER IN HIGH TRAFFIC AREAS TO PROTECT THE FRESH CONCRETE FOR A MINIMUM OF 40 HOURS. IN THESE HIGH TRAFFIC AREAS, BARRICADES, CONES, ETC. WILL NOT BE ALLOWED.
4. BEFORE WORKING IN AN AREA, THE CONTRACTOR SHALL NOTIFY MARIETTA WATER.

NOTES:

1. SEWER LATERAL TO BE LOCATED 5 FEET FROM THE SIDE LOT LINE ON THE DOWNSTEAM SIDE OF THE SANITARY SEWER.
2. MIN. SLOPE OF 1% REQ'D. FOR 6" SERVICE.
3. SEE DETAIL FOR CLEANOUTS.

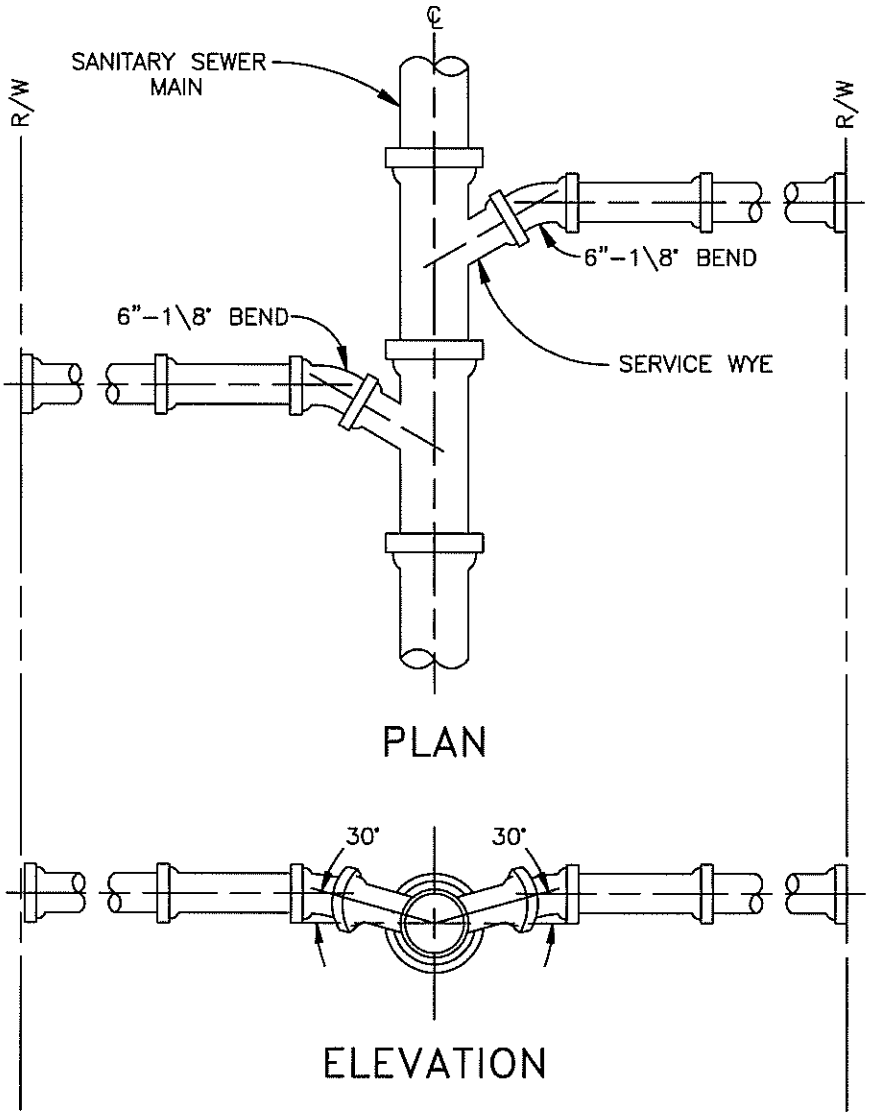

SEWER SERVICE LATERAL

Marietta WATER	SEWER SERVICE LATERAL	Standard No. 402-08

S:\MARIETTABLW\BLW DETAILS 2010\402-08.D
PLOTTED: APRIL 27, 2010

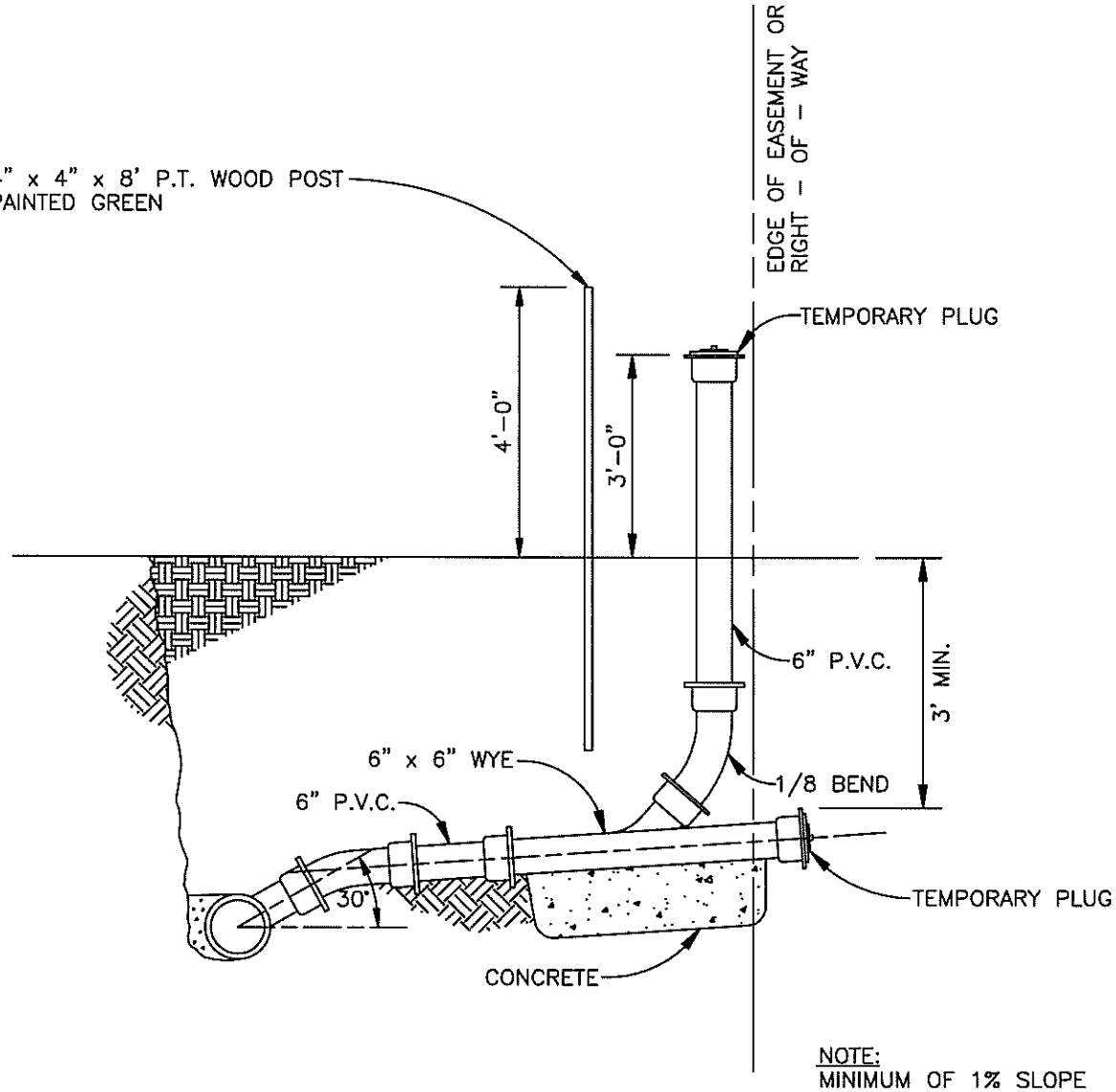

NOTE:
MINIMUM OF 1% SLOPE MUST BE PROVIDED FOR 6" SERVICES.

SANITARY SEWER SERVICE LOCATION DETAIL

(BY SEWER CONTRACTOR)

Marietta WATER

SEWER SERVICE LOCATION DETAIL

Standard No. 402-09

S:\MARIETTABLW\BLW DETAILS 2010\402-09.D
PLOTTED: APRIL 27, 2010

S:\MARIETTABLW\BLW DETAILS 2010\402-10.D

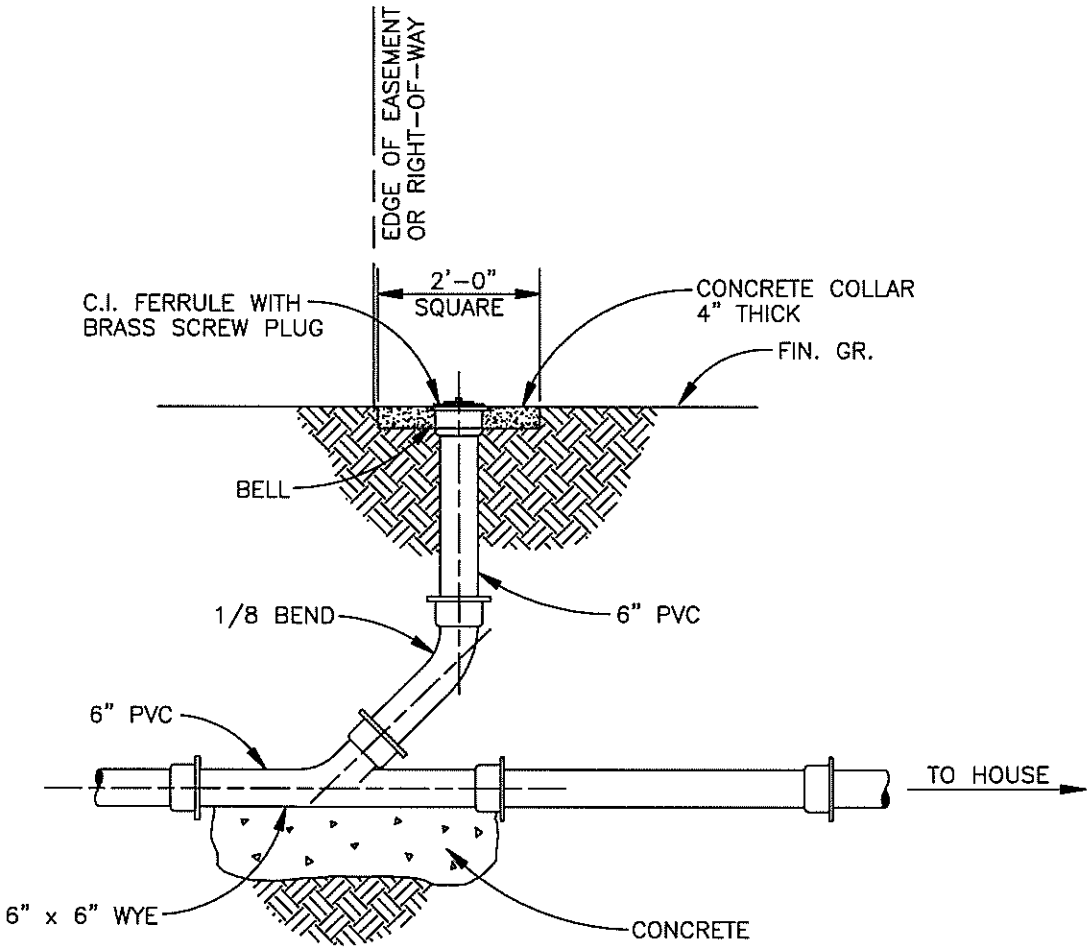

CLEANOUT DETAIL

(BY BUILDER)

PLOTTED: APRIL 27, 2010

Marietta WATER

CLEANOUT DETAIL

Standard No.

402-10

S: \MARIETTABLW\BLW DETAILS 2010\402-11.D

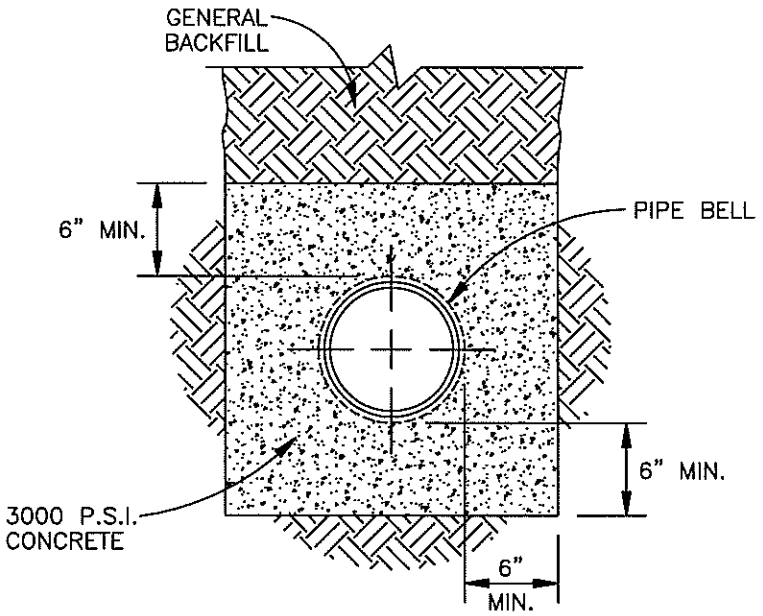

CONCRETE ENCASEMENT

PLOTTED: APRIL 27, 2010

Marietta WATER

CONCRETE ENCASEMENT

Standard No.

402-11

S:\MARIETTABLW\BLW DETAILS 2010\402-12.D

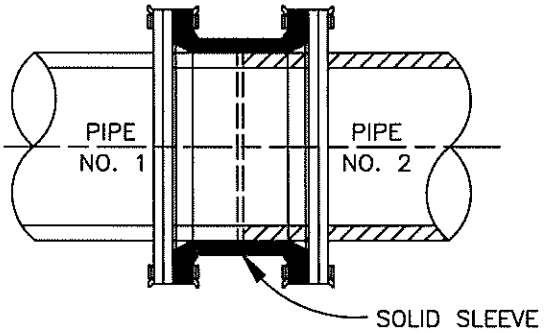

PIPE ADAPTER
JOINING DIFFERENT TYPES OF PIPE

PLOTTED: APRIL 27, 2010

Marietta WATER

TYPICAL
PIPE ADAPTER

Standard No.
402-12

S:\MARIETTABLW\BLW DETAILS 2010\402-13.C

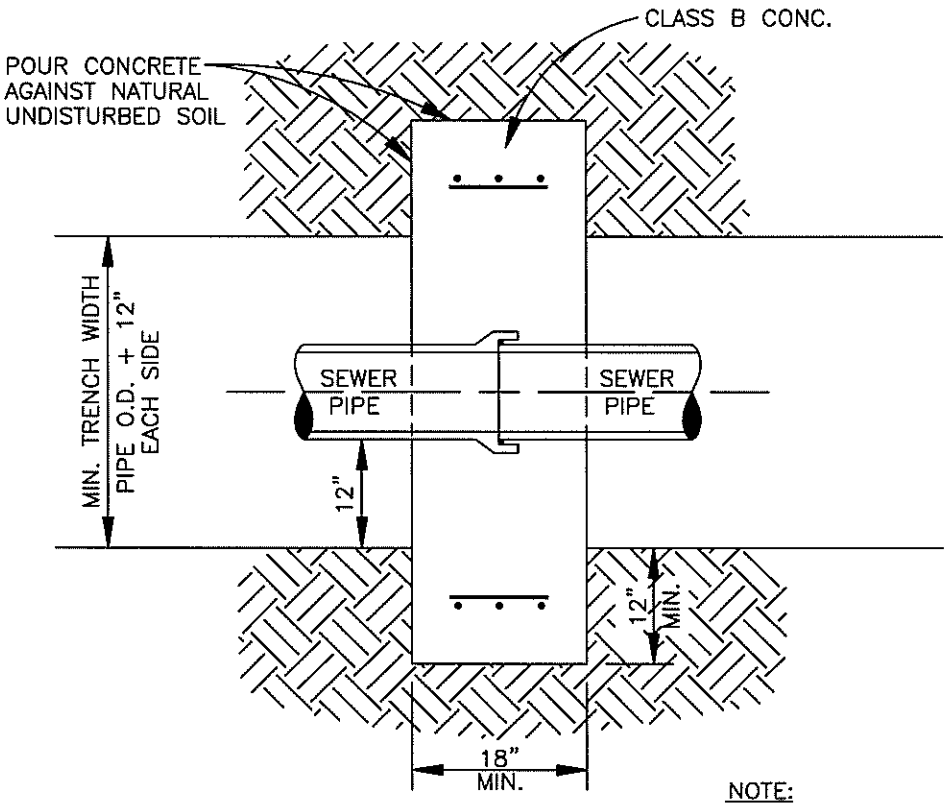

PLAN

NOTE:

1. COLLAR REQUIRED AT EVERY PIPE JOINT.

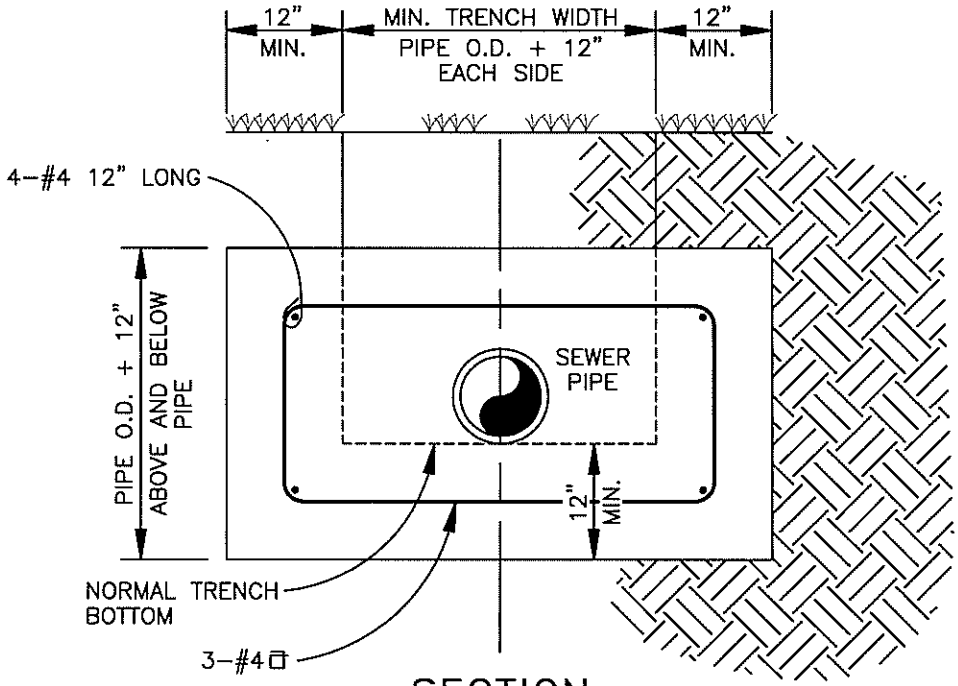

SECTION

SEWER PIPE ANCHOR

PLOTTED: APRIL 27, 2010

Marietta WATER

SEWER PIPE ANCHOR
(SLOPES 20% OR MORE)

Standard No.
402-13

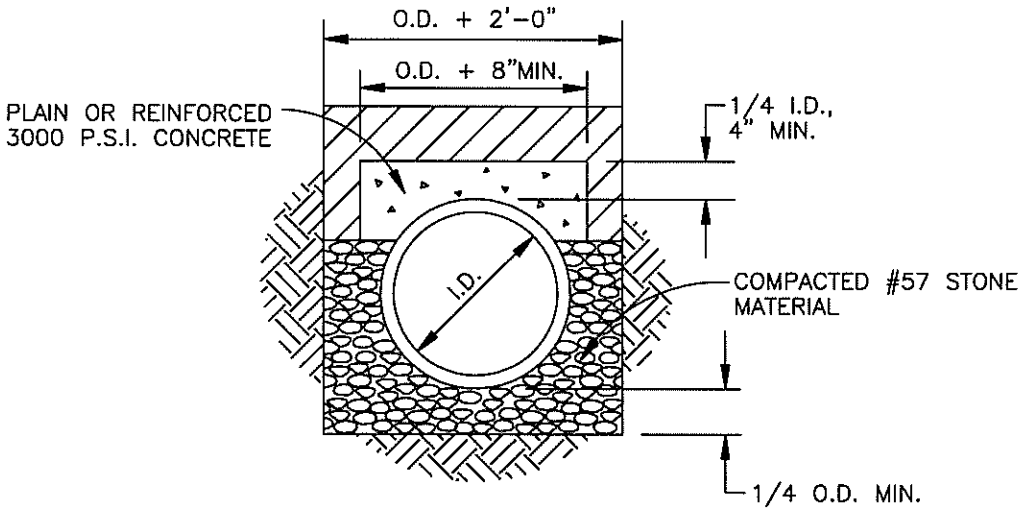

CONCRETE ARCH

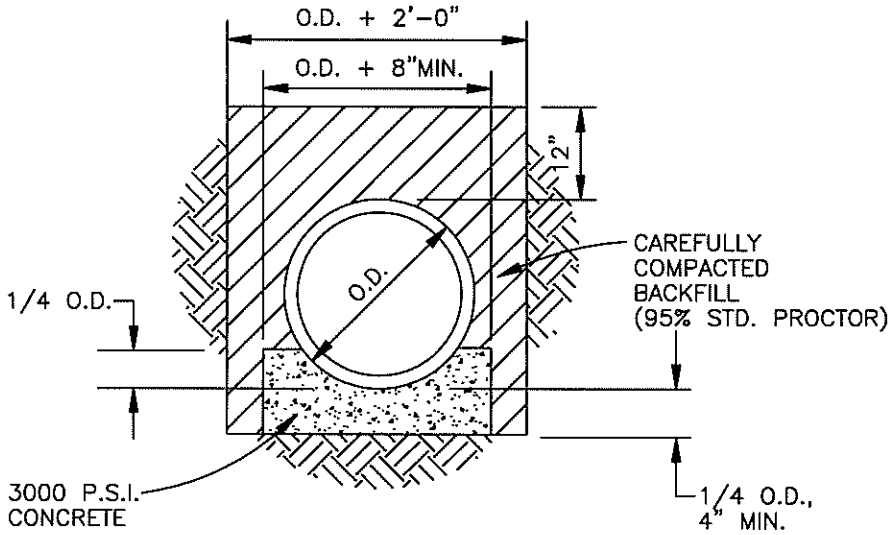

CONCRETE CRADLE

S:\MARIETTABLW\BLW DETAILS 2010\402-14.D

PLOTTED: APRIL 27, 2010

Marietta WATER

PIPE CLASS
'A' BEDDING

Standard No.
402-14

S:\MARIETTABLW\BLW DETAILS 2010\402-10.D

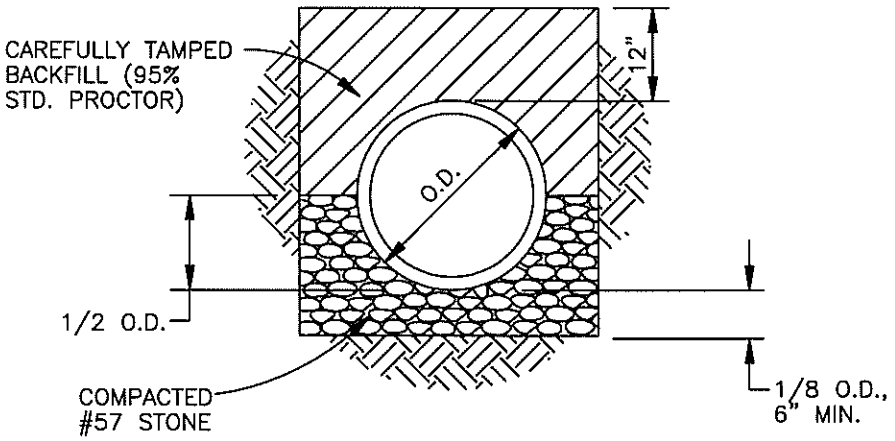

COMPACTED GRANULAR BEDDING
LOAD FACTOR 1.9

PIPE CLASS 'B' BEDDING

PLOTTED: APRIL 27, 2010

Marietta WATER

PIPE CLASS
'B' BEDDING

Standard No.
402-15

S:\MARIETTABLW\BLW DETAILS 2010\402-16.D

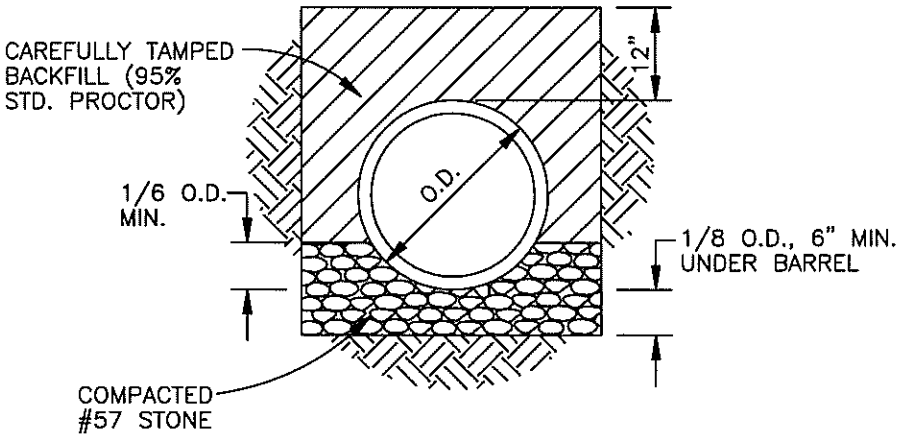

GRANULAR BEDDING
LOAD FACTOR 1.5

PIPE CLASS 'C' BEDDING

CLASS 'C' BEDDING IS THE MINIMUM BEDDING REQUIRED.
MORE STRINGENT BEDDING MAY BE REQUIRED BY MARIETTA WATER.

PLOTTED: APRIL 27, 2010

Marietta WATER	PIPE CLASS 'C' BEDDING	Standard No. 402-16

S:\MARIETTABLW\BLW DETAILS 2010\402-17.DWG

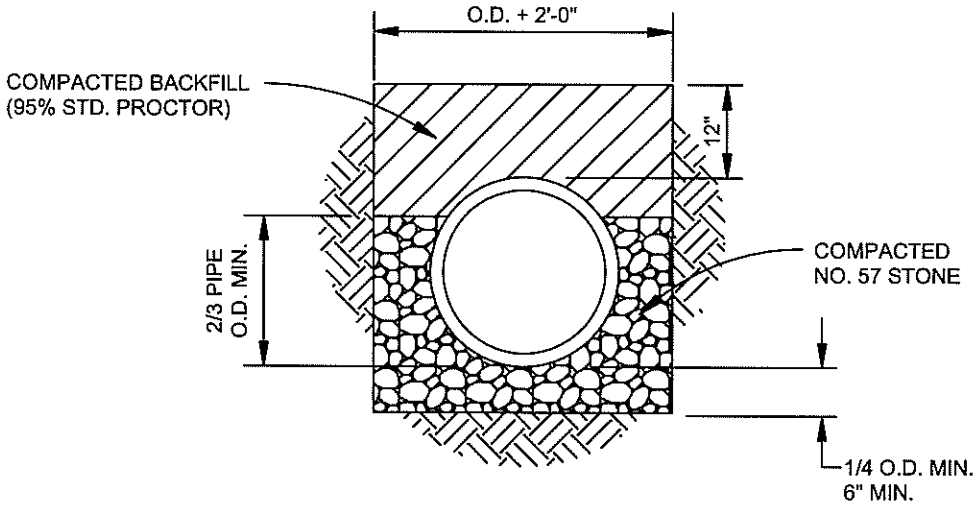

MINIMUM P.V.C. PIPE BEDDING DETAIL

PLOTTED: APRIL 27, 2010

Marietta WATER	MINIMUM P.V.C. PIPE BEDDING DETAIL	Standard No. 402-17

S:\MARIETTABLW\BLW DETAILS 2010\402-18.C

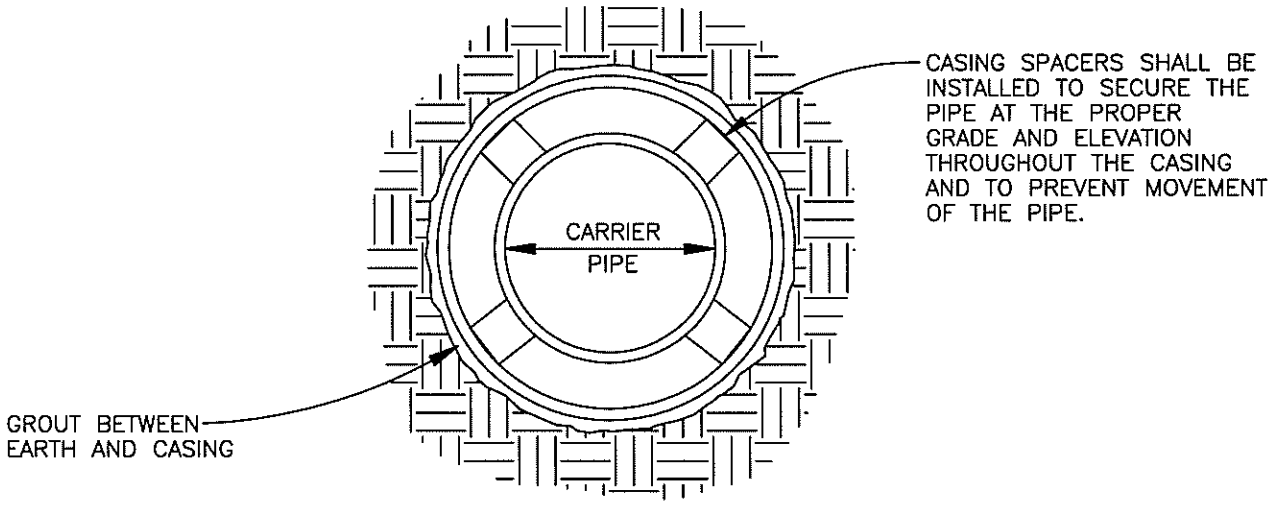

CASING SPACER DETAIL

PLOTTED: APRIL 27, 2010

Marietta WATER

SEWER CASING SPACER DETAIL

Standard No. 402-18

S:\MARIETTA\BLW\BLW DETAILS 2010\402-19.DWG

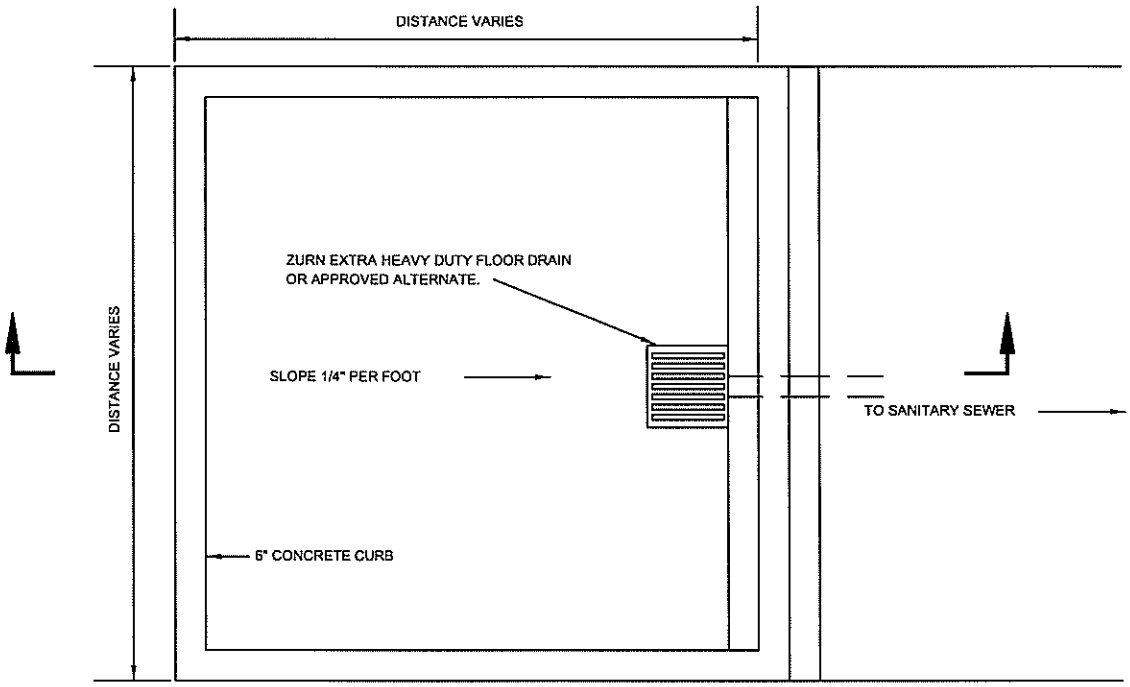

PLAN VIEW

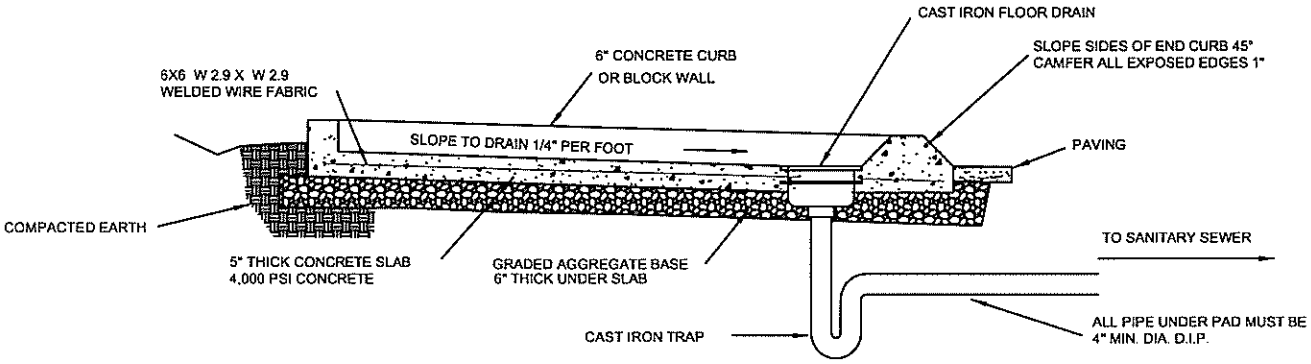

SECTION VIEW

NOTES:
1. FLOW FROM DUMPSTER PAD SHALL BE ROUTED THROUGH GREASE TRAP IF APPLICABLE.
2. DUMPSTER AREA MUST BE COVERED AS OUTLINED IN SECTION 302.02.

PLOTTED: APRIL 27, 2010

Marietta WATER	DUMPSTER PAD DETAIL	Standard No. 402-19

S:\MARIETTA\BLW\BLW DETAILS 2010\401-15.DWG

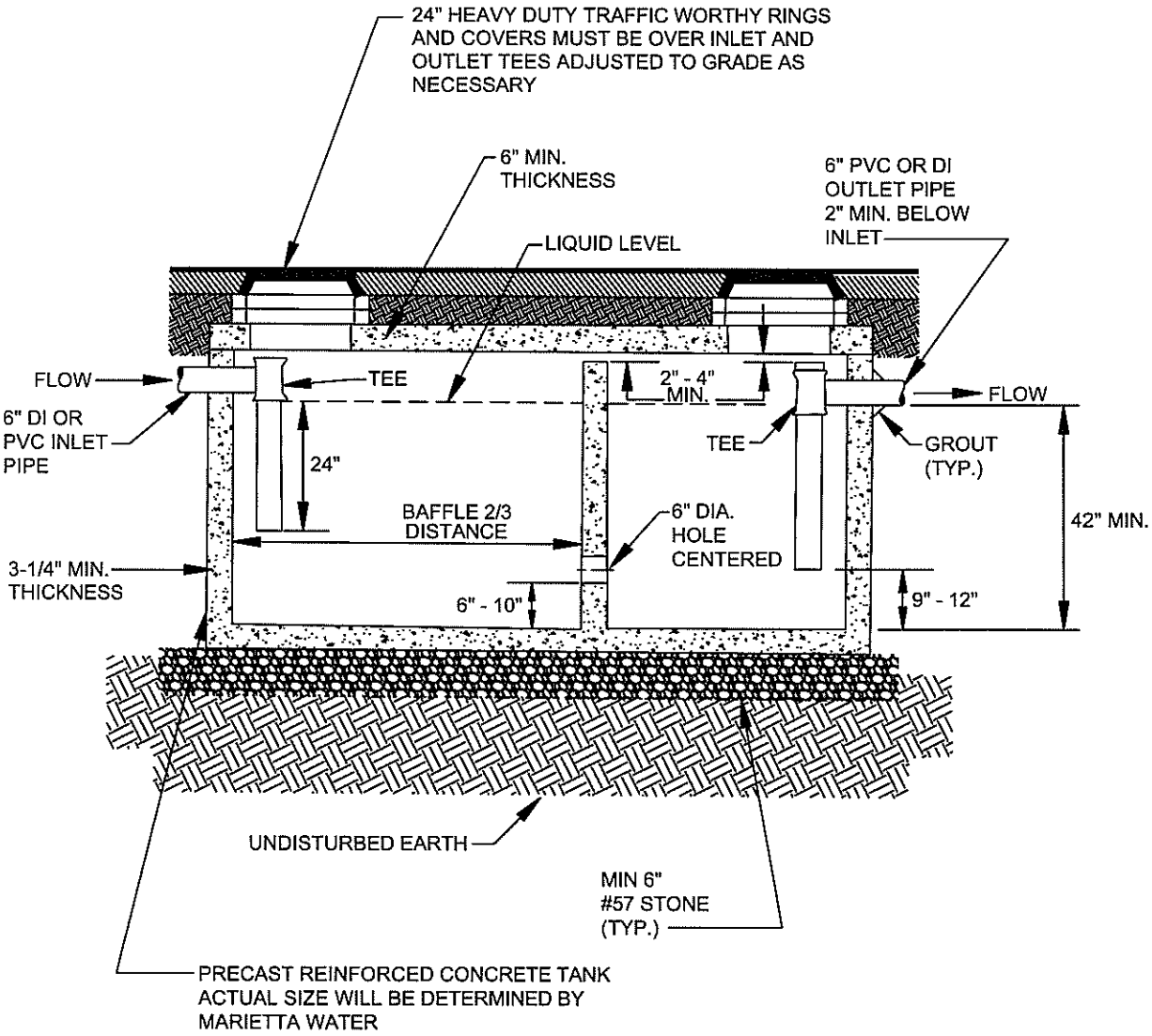

NOTES:

1. STAND ALONE TRAP REQUIRE 1,500 GALLON MINIMUM.

2. NON-STAND ALONE TRAPS ARE A 25 GALLON MINIMUM.

3. FOR NON-FOOD PREP DUMPSTER PADS ONLY:
   300 GALLON MINIMUM SIZE AND 4" MINIMUM PIPE SIZE.
   ONLY 1 MANHOLE REQUIRED AND NO BAFFLE REQUIRED.

4. INSPECTION BY MARIETTA WATER REQUIRED BEFORE COVERING.

GREASE TRAP DETAIL

PLOTTED: APRIL 27, 2010

Marietta WATER	GREASE TRAP	Standard No. 402-20

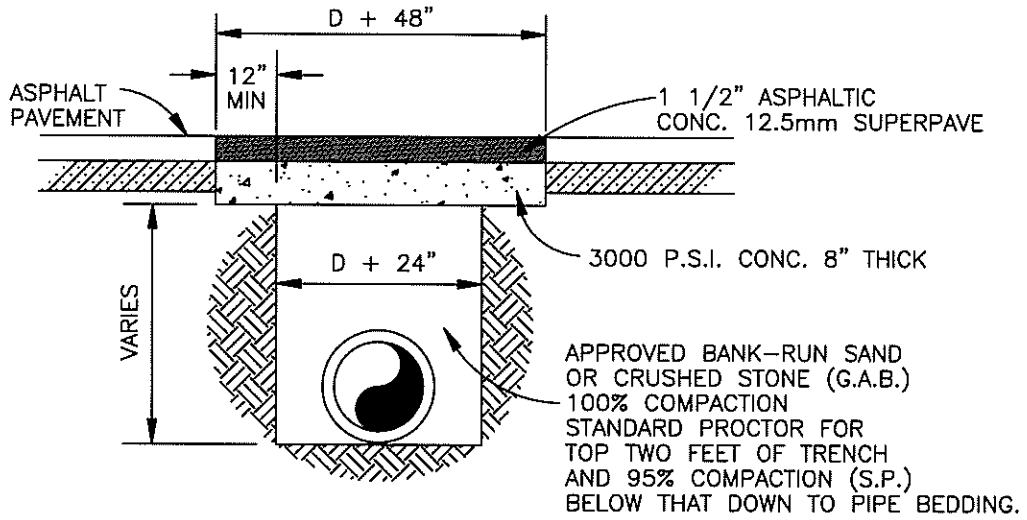

STATE OR STATE-AID ROADS

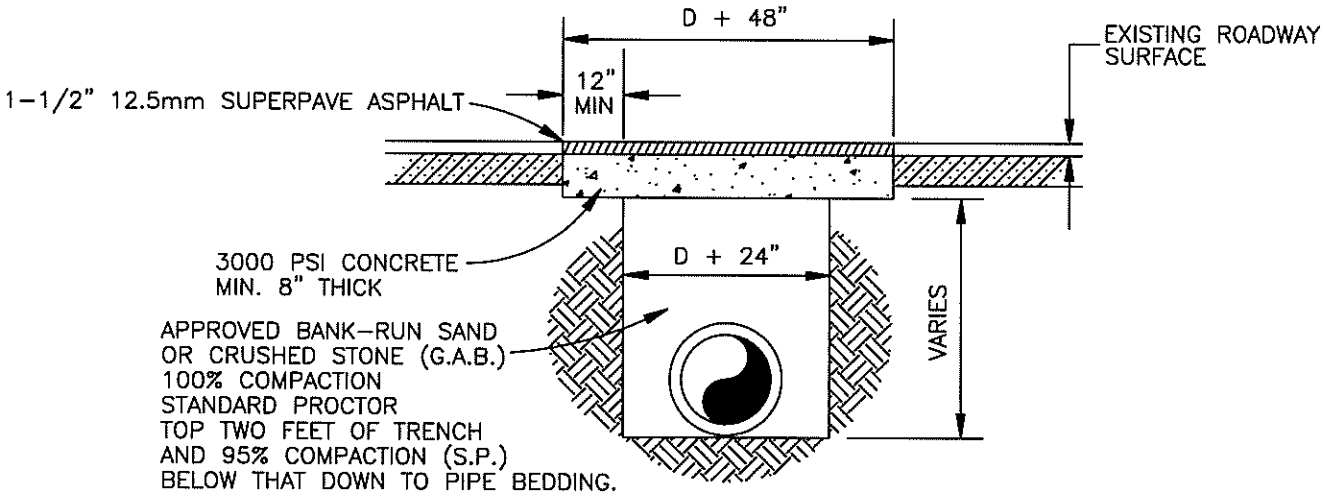

CITY OR COUNTY ROADS

NOTES:

1. PERMISSION MUST BE OBTAINED TO OPEN CUT EXISTING ROADS.
2. ROADWAYS WILL GENERALLY BE BORED OR TUNNELED FROM DITCH LINE TO DITCH LINE.
3. IF CONCRETE PAVEMENT, REPLACE WITH ORIGINAL THICKNESS (MINIMUM 8"), FLUSH WITH EXISTING PAVEMENT.
4. D = NOMINAL PIPE DIAMETER

Marietta WATER	TYPICAL STREET CUT REPAIR	Standard No. 403-01

S:\MARIETTABLW\BLW DETAILS 2010\403-01.D
PLOTTED: APRIL 27, 2010

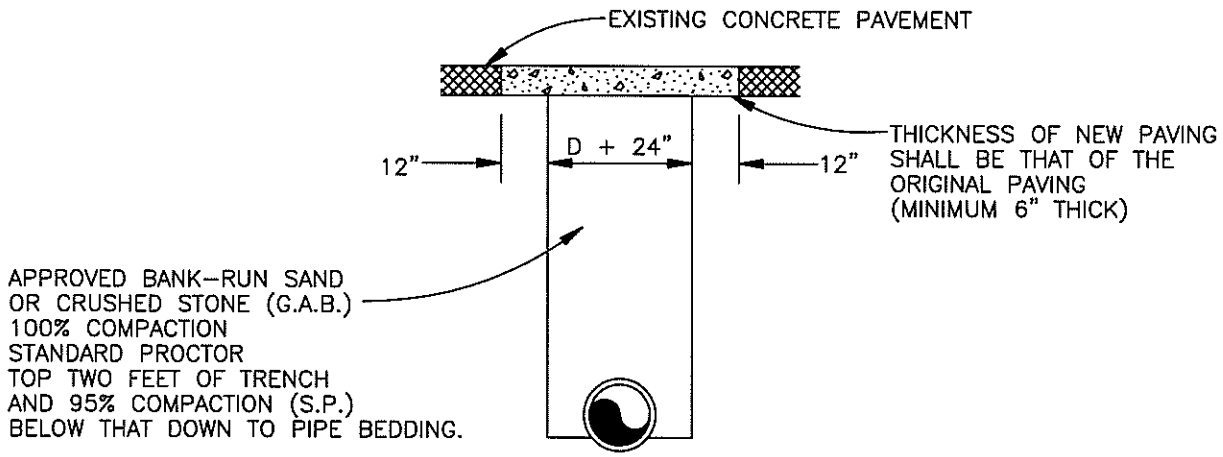

CONCRETE DRIVEWAY

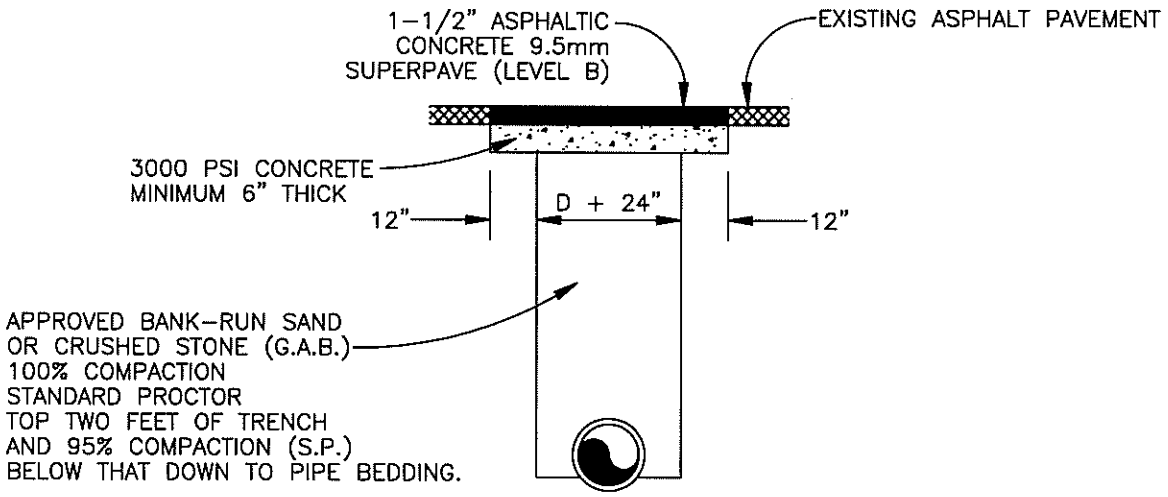

ASPHALT DRIVEWAY

NOTES:

1. BACKFILL TO BE COMPACTED AS DIRECTED IN SPECIFICATIONS.
2. D = NOMINAL PIPE DIAMETER

Marietta WATER	TYPICAL DRIVEWAY CUT REPAIR	Standard No. 403-02

S:\MARIETTABLW\BLW DETAILS 2010\403-02.D
PLOTTED: APRIL 27, 2010

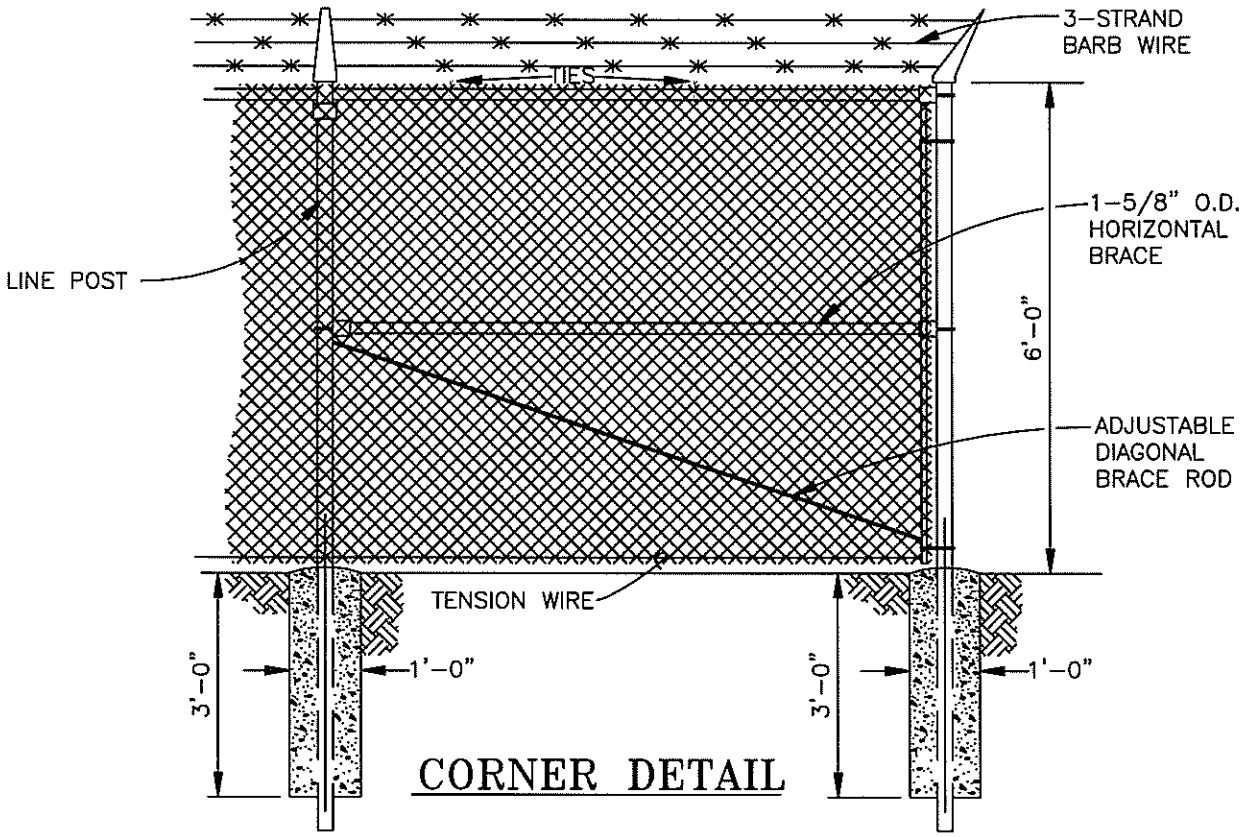

CORNER DETAIL

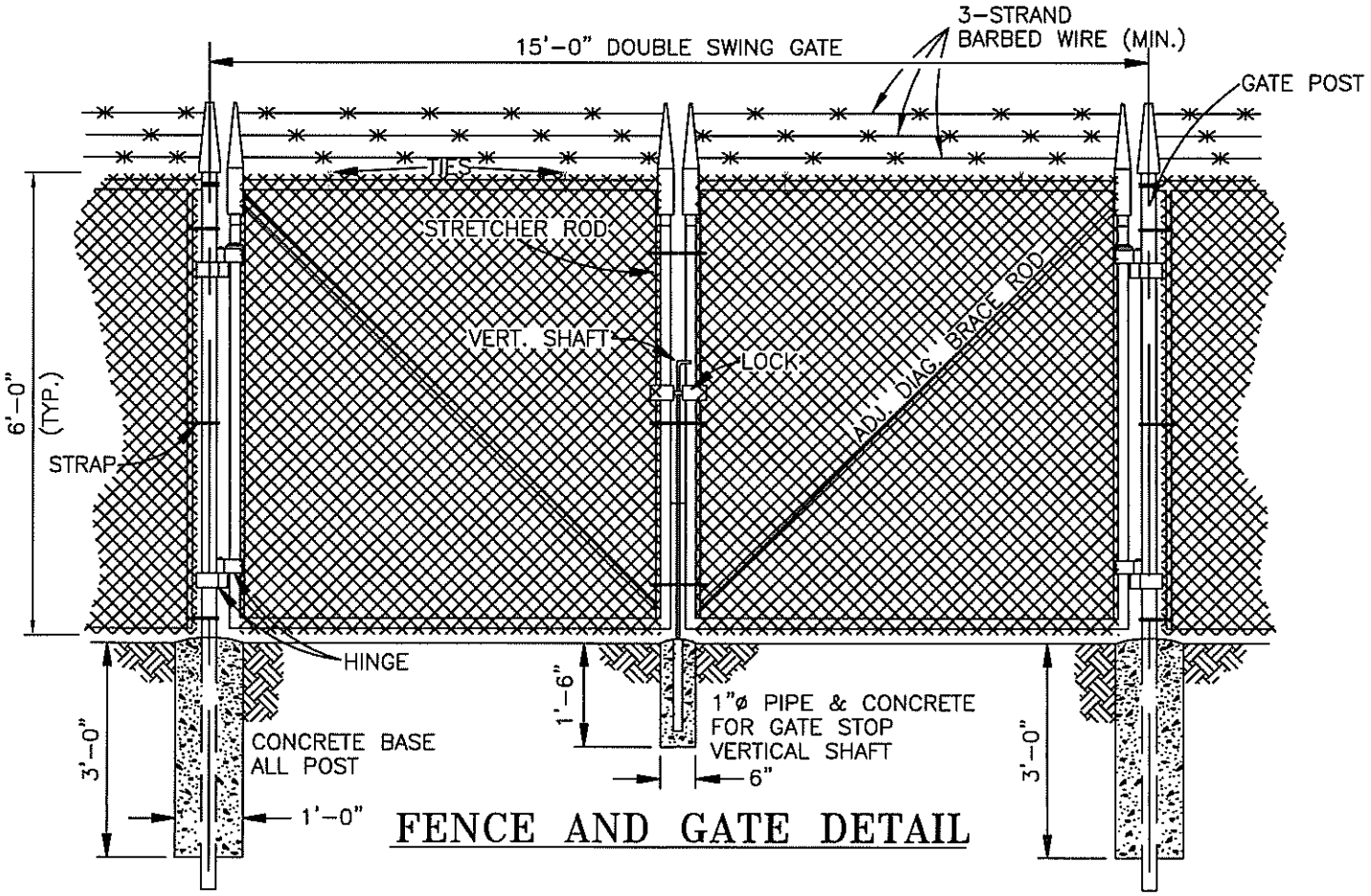

FENCE AND GATE DETAIL

Marietta WATER

FENCE AND GATE DETAIL

Standard No.

403-03

S:\MARIETTABLW\BLW DETAILS 2010\403-03.D

PLOTTED: APRIL 27, 2010