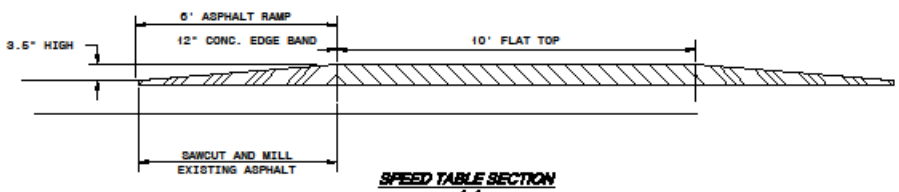

SPEED TABLE SECTION
A-A

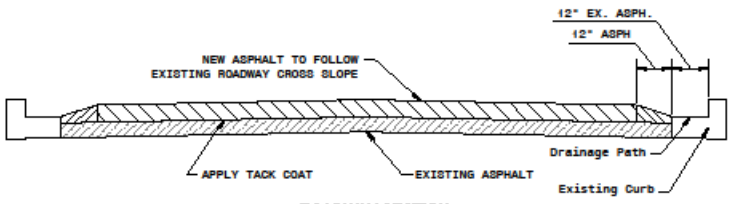

ROADWAY SECTION
THRU SPEED TABLE
B-B

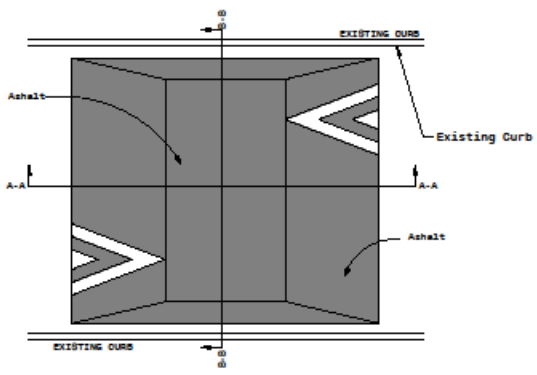

PLAN VIEW

Marietta GEORGIA	CITY OF MARIETTA TYPICAL ASPHALT SPEED TABLE
7/24/2012	NOT TO SCALE

N

City of Marietta
Proposed Speed Tables on Evelyn St

CITY OF Marietta GEORGIA

0 25 50 100 150 200 250
Feet